ECO

CODING
-523059

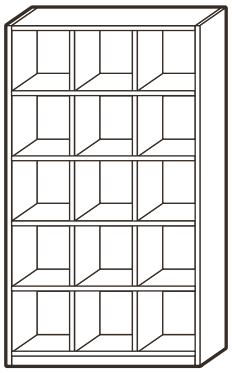

ISO 9001:2015
Reg. No. 000435-1-MY-1-QMS

Read the instructions carefully. Remove all the wrappings , staples and straps from the carton. Refer to the hardware and furniture part list for guidance. Make sure that you have all the parts before you start assembling. Place all the wooden furniture parts on a clean, flat and soft surface, such as a carpet or rubbermat to prevent scratches.

CAUTION
KEEP ALL THE PARTS OUT OF REACH OF CHILDREN.

	HARDWARE LIST	QTY
A	M5 x 40mm JCBCW Screw	48
B	M3.5 x 22mm Chipboard Screw	10
C	M3.5 x 16mm Chipboard Screw	8
D	Wood Dowel 6 x 25mm	68
E	Nail	120
F	Plastic Leg (1374)	5
G	L Bracket	2
H	Allen Key	1

ITEM	PART LIST	QTY
1	Left Panel	1
2	Right Panel	1
3	Top Panel	1
4	Bottom Panel	1
5	Brace Panel	4
6	Centre Panel	10
7	Leg Panel	1
8	Back Panel	1

ECO

CODING
-523059

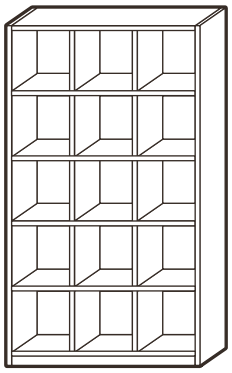

ISO 9001:2015
Reg. No. 000435-1-MY-1-QMS

Step 1

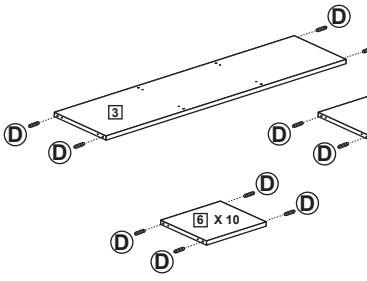

Step 2

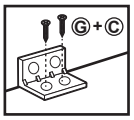

Step 3

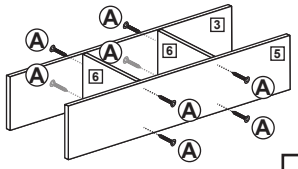

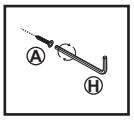

Step 1

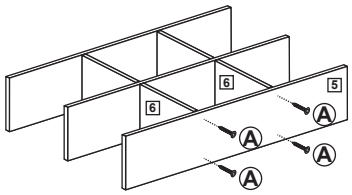

Step 2

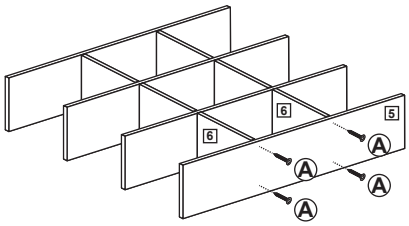

Step 3

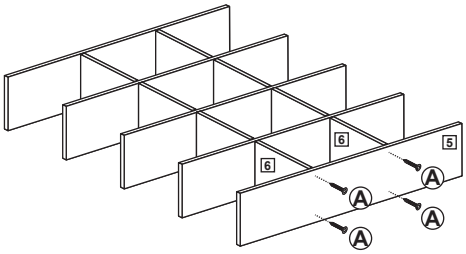

Step 1

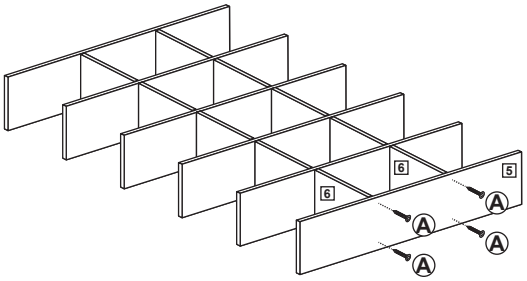

Step 2

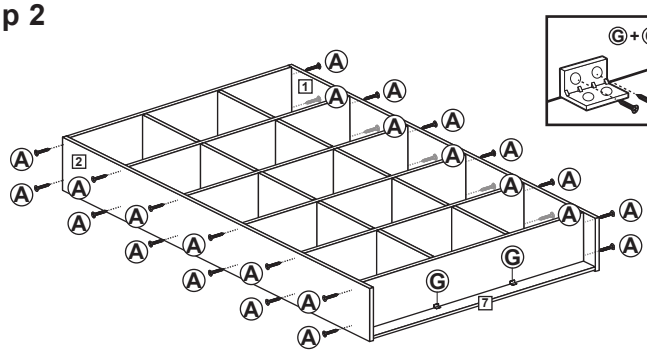

Step 1

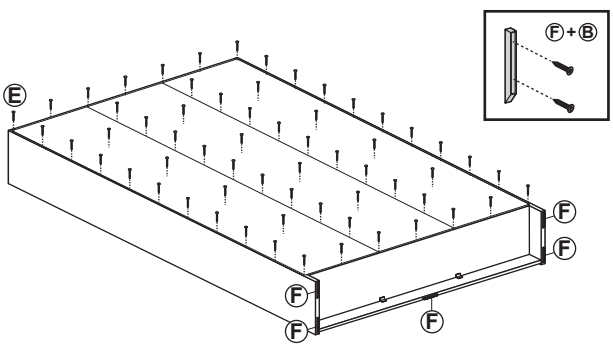

Step 2

