OLAINE

ASSEMBLY GUIDE

CODING
- 522092

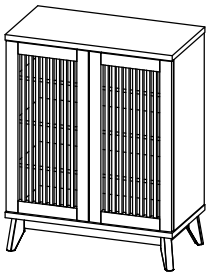

ISO 9001:2015
Reg. No. 600455-1-MY-1-QMS

Read the instructions carefully. Remove all the wrappings , staples and straps from the carton. Refer to the hardware and furniture part list for guidance. Make sure that you have all the parts before you start assembling. Place all the wooden furniture parts on a clean, flat and soft surface, such as a carpet or rubbermat to prevent scratches.

CAUTION
KEEP ALL THE PARTS OUT OF CHILDREN'S REACH.

HARDWARE		
A	MINI FIX A1 A2 A3	8 SETS
B	M8 X 30MM WOOD DOWEL	8 PCS
C	M6 X 60MM CSK CAP WOOD SCREW	4 PCS
D	ALLEN KEY M4	1 PC
E	M3.5 X 16MM C.B SCREW	24 PCS
F	METAL SHELF SUPPORT	12 PCS
G	STOPPER(2 PIN)	2 PCS
H	JCBC Screw M6 x 70	8 PCS
I	SPRING WASHER M6	8 PCS
J	FLAT WASHER M6	8 PCS
K	STUD 192 WITH SCREW K1 K2	8 PCS
L	SOFT CLOSING 5/8 HINGES	4 PCS

PART LIST		QTY
1	TOP PANEL	1 PC
2	BOTTOM PANEL	1 PC
3	SIDE PANEL (L)	1 PC
4	SIDE PANEL (R)	1 PC
5	SHELF PANEL	3 PCS
6	BACK SUPPORT	1 PC
7	BACK PANEL	1 PC
8	DOOR PANEL	2 PCS
9	CABINET LEG	4 PCS

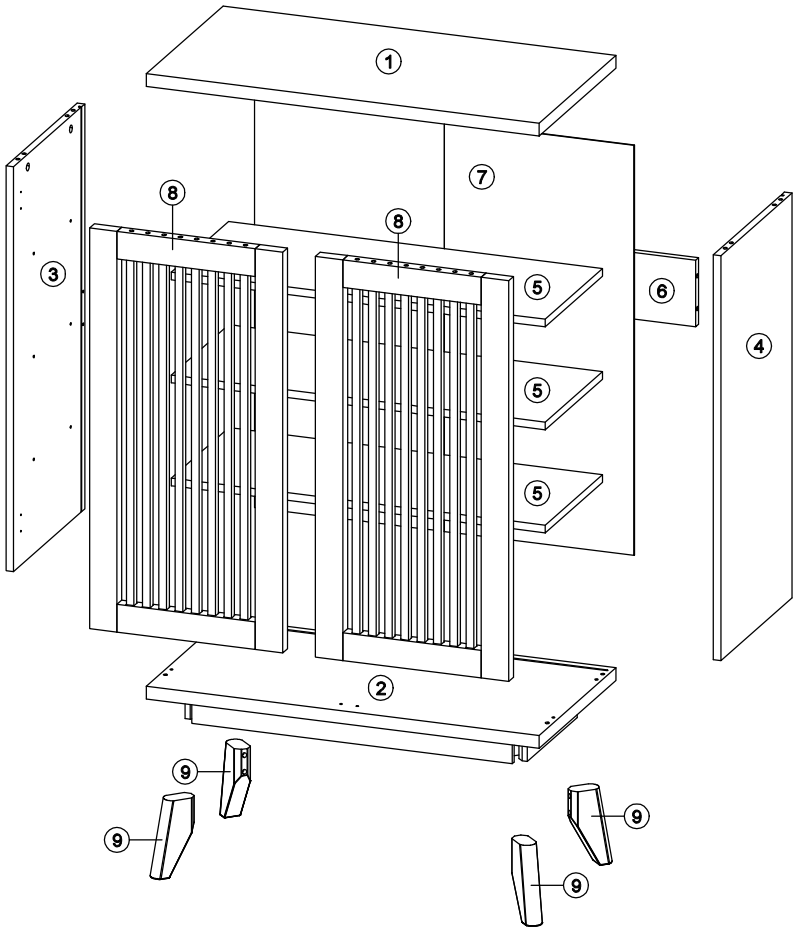

SELF-PREPARED TOOLS: Tools below are NOT included in package.	
SCREWDRIVER	HAMMER

OLAINE

CODING
- 522092

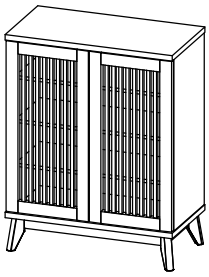

ISO 9001:2015
Reg. No. 600455-1-MT-1-QMS

STEP 1
- Insert hardware **A2** onto panel **(1)**, **(3)** and **(4)**. (Repeat 8 times.)
- Insert hardware **B** into panel **(3)** and **(4)**. (Repeat 8 times.)

SCREWDRIVER REQUIRED

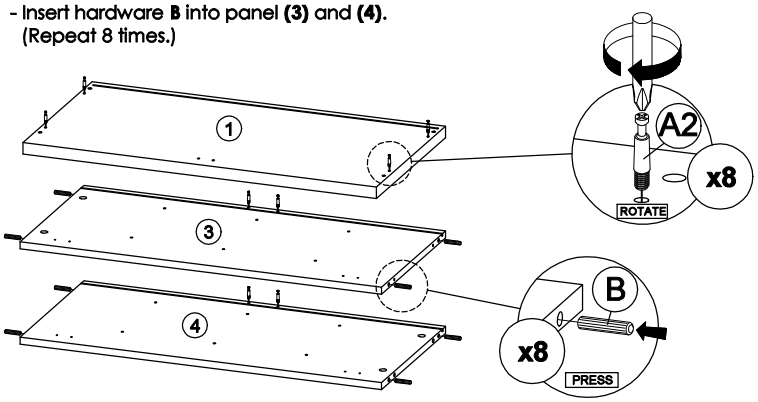

STEP 2
- Hit hardware **G** onto panel **(1)** and **(2)**. (Repeat 2 times.)

HAMMER REQUIRED

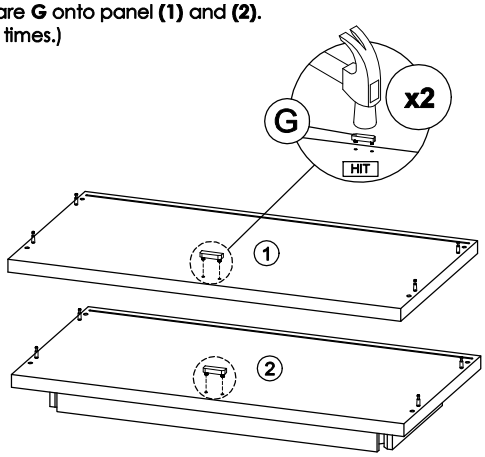

STEP 3
- Insert hardware **A1** into panel **(6)**. (Repeat 4 times.)
- Attach panel **(3)** and **(4)** to panel **(6)**.
- Insert all hardware **A2** into **A1**.
- Rotate all **A1** until tight.
- Apply **A3** onto all **A1**. (Repeat 4 times.)

SCREWDRIVER REQUIRED
OR
HARDWARE D

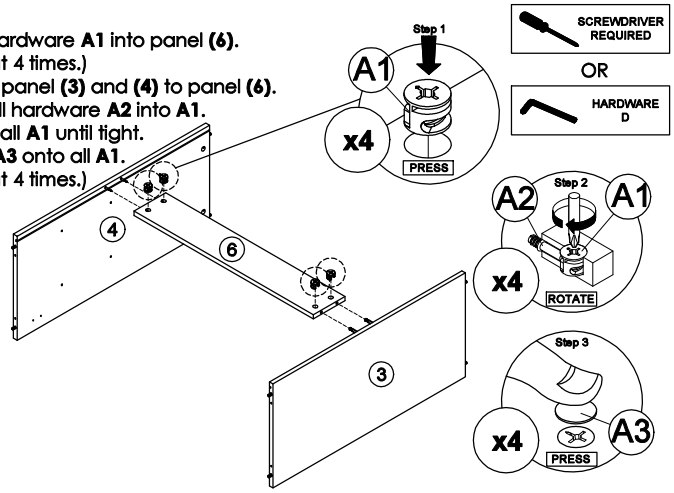

STEP 4
Connect panel **(2)** to panel **(3)** and **(4)** by using hardware **C** and **D**. (Repeat 4 times.)

SCREWDRIVER REQUIRED
OR
HARDWARE D

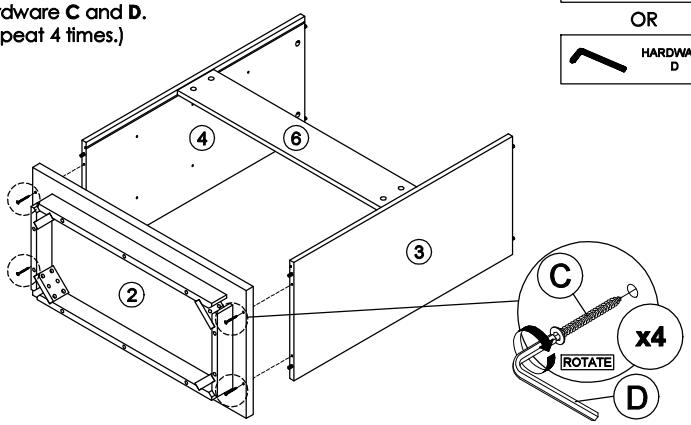

STEP 5
Insert the panel **(7)** along the slot.

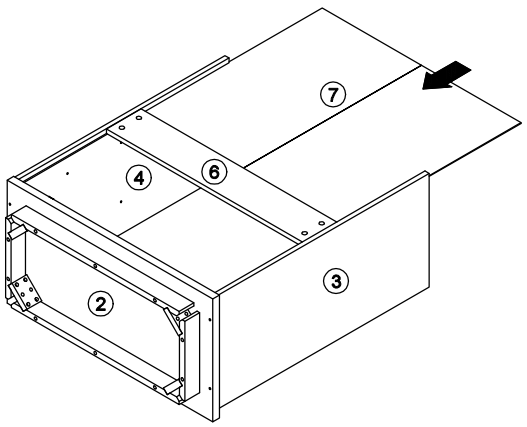

STEP 6
- Insert hardware **A1** into panel **(3)** and **(4)**. (Repeat 4 times.)
- Attach panel **(1)** to panel **(3)** and **(4)**.
- Insert all hardware **A2** into **A1**.
- Rotate all **A1** until tight.
- Apply **A3** onto all **A1**. (Repeat 4 times.)

SCREWDRIVER REQUIRED
OR
HARDWARE D

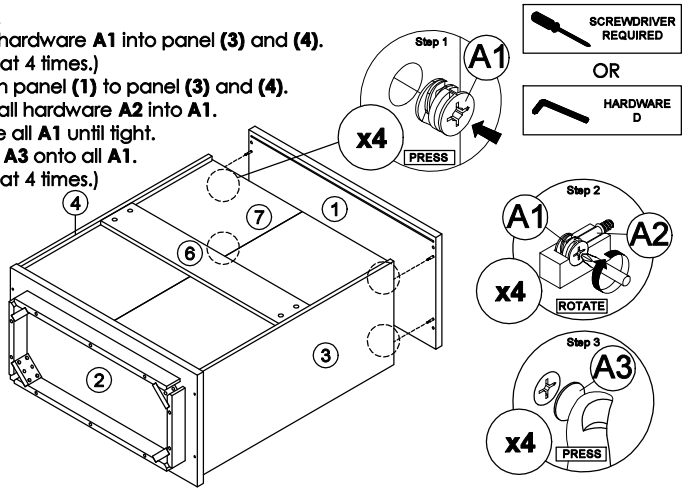

OLAINE

CODING
- 522092

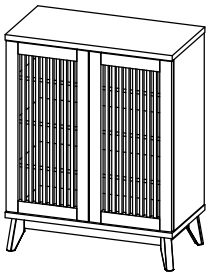

ISO 9001:2015
Reg. No. 600455-1-MT-1-QMS

STEP 7

HARDWARE D

Assemble part **9** to panel **(2)** by using hardware **D, H, I** and **J.**
(Repeat 2 times for each Leg.)

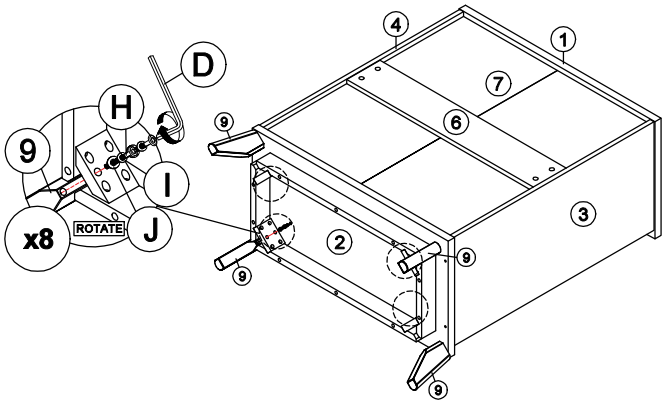

STEP 8

SCREWDRIVER REQUIRED

- Insert hardware **K1** into slot at panel **(1), (2), (3)** and **(4).**
- Assemble hardware **K1** by using hardware **K2.**
  (Repeat 8 times.)

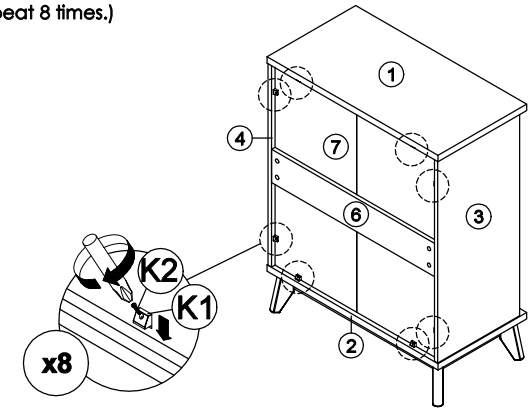

STEP 9

Insert hardware **F** into mounting positions on panel **(3)** and **(4)** by hand.
(Repeat 12 times.)

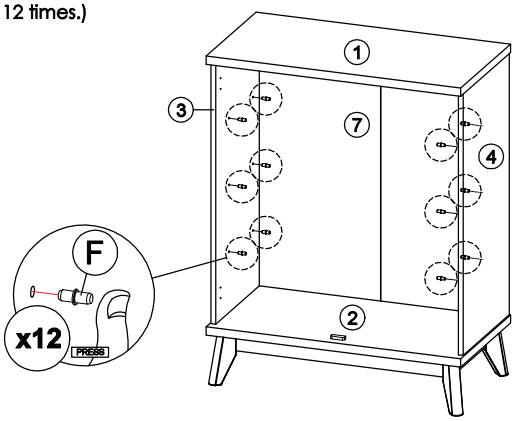

STEP 10

Assemble the panel **(5)** into between panel **(3)** and **(4).**

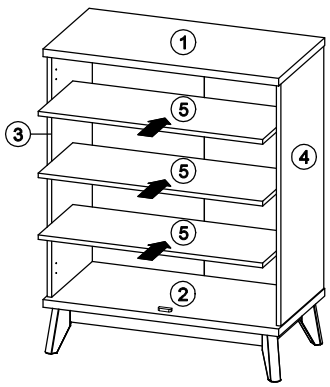

STEP 11

SCREWDRIVER REQUIRED

Fix hardware **L** onto panel **(8)** by using hardware **E.**
(Repeat 2 times for each hardware.)

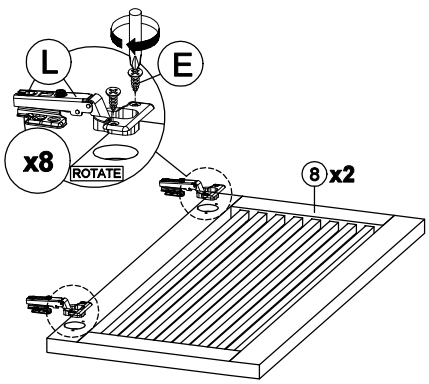

STEP 12

- Fix hardware **L** onto panel **(3)** and **(4)** by using hardware **E.**
  (Repeat 4 times for each hardware.)
- Tighten or loosen the screw to adjust position of panel **(8).**
  (Do only when needed.)

