# OPTIMUS



**SKU CODE**

| SPL -CUBE | SPS - CUBE |
|---|---|
| 3518009 (Beige) | 511059 (Beige) |
| 3518010 (Grey) | 511060 (grey) |
| 511056 (Red) | |
| 511057 (Yellow) | |
| 511058 (Blue) | |

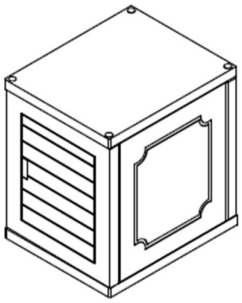

**ISO 9001 : 2015**
Reg.No.000435-1-MY-1-QMS

Read the instructions carefully. Remove all the wrappings , staples and straps from the carton.
Refer to the hardware and furniture part list for guidance.
Make sure that you have all the parts before you start assembling.
Place all the wooden furniture parts on a clean, and soft surface, such as a carpet or rubbermat to prevent scratches

## CAUTION

KEEP ALL THE PARTS OUT OF CHILDREN'S REACH

| ITEM | PHOTO | PART NAME | QTY. |
|---|---|---|---|
| 1 | 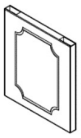 | X | 1 |
| 2 | 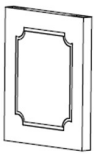 | Y | 2 |
| 3 | 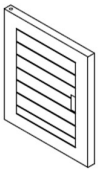 | E | 1 |
| 4 | 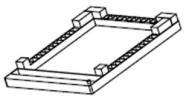 | K.T<br>K.B | 1<br>1 |

| ITEM | PHOTO | PART NAME | QTY. |
|---|---|---|---|
| 5 | 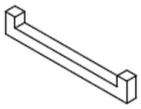 | S+ | 2 |
| 6 |  | c | 8 |
| 7 |  | Double Cap | 2 |
| 8 |  | J | 4 |

# OPTIMUS



**SKU CODE**

| SPL -CUBE | SPS - CUBE |
|---|---|
| 3518009 (Beige) | 511059 (Beige) |
| 3518010 (Grey) | 511060 (grey) |
| 511056 (Red) | |
| 511057 (Yellow) | |
| 511058 (Blue) | |

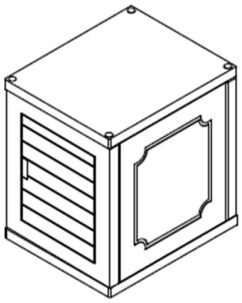

**ISO 9001 : 2015**
Reg.No.000435-1-MY-1-QMS

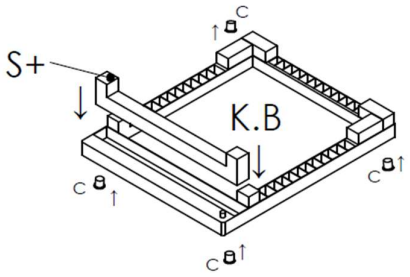


① Assemble S+ and C

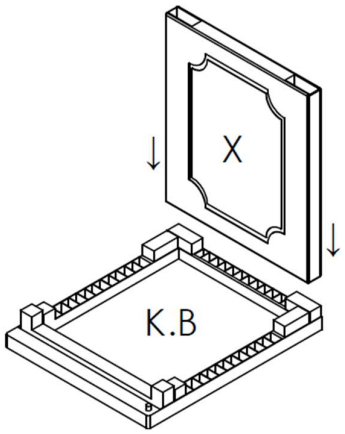


② Assemble X

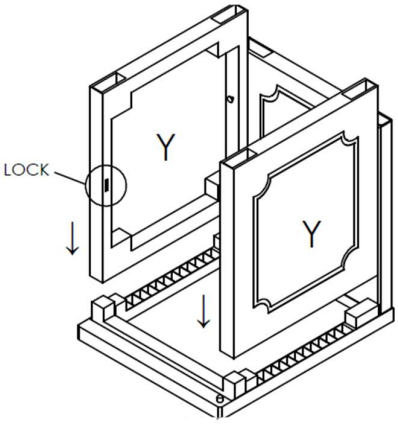


③ Assemble Y

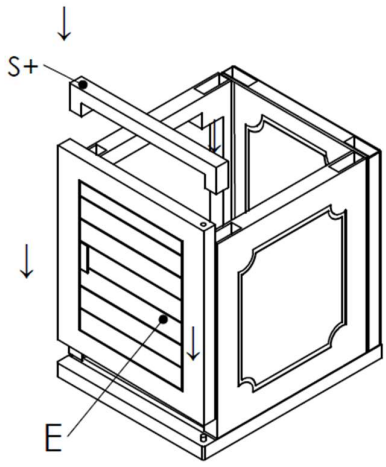


④ Assemble S+ follow by E

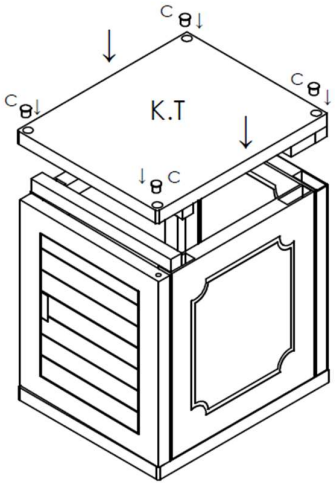


⑤ Assemble K.T follow by C

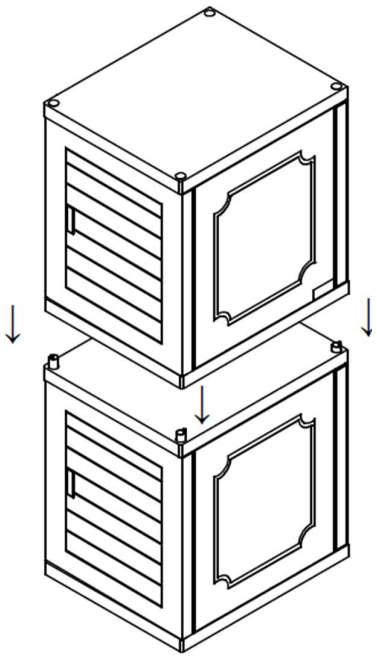

Stackable Option

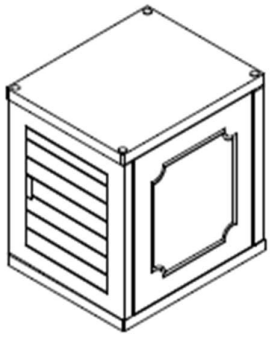

Final Product

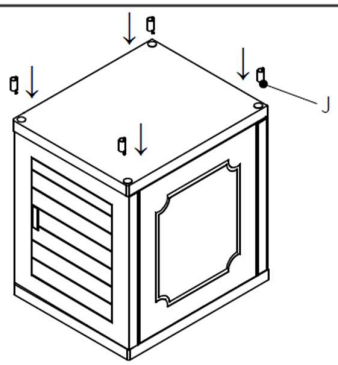


⑥ Assemble J