VOLOS

CODING
- 354039

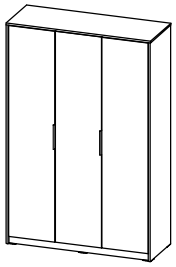

ISO 9001:2015
Reg. No. 600455-1-MY-1-QMS

Read the instructions carefully. Remove all the wrappings , staples and straps from the carton. Refer to the hardware and furniture part list for guidance. Make sure that you have all the parts before you start assembling. Place all the wooden furniture parts on a clean, flat and soft surface, such as a carpet or rubbermat to prevent scratches.

CAUTION
KEEP ALL THE PARTS OUT OF CHILDREN'S REACH.

HARDWARE		
A	MINI FIX A1 A2 A3	37 SETS
B	M8 X 30MM WOOD DOWEL	34 PCS
C	M6 X 50MM CSK CAP WOOD SCREW	2 PCS
D	ALLEN KEY M4	1 PC
E	M3.5 X 16MM C.B SCREW	95 PCS
F	M3 X 12MM C.B SCREW	4 PCS
G	PAN HEAD SCREW M4 X 16MM	14 PCS
H	1340 DRAWER STOPPER(2 PIN)	1 PC
I	HANDLE EM 0071	2 PCS
J	433 OVAL TUBE BRACKET	2 PCS
K	433 OVAL PAIP	1 PC
L	SOFT CLOSING 7/8 HINGES	9 PCS
M	864 PVC NAIL LEG BLACK (L)	6 PCS

PART LIST		QTY
1	TOP PANEL	1 PC
2	BOTTOM PANEL	1 PC
3	SIDE PANEL (L)	1 PC
4	SIDE PANEL (R)	1 PC
5	CENTER PANEL	1 PC
6	MIDDLE PANEL (L)	3 PCS
7	MIDDLE PANEL (R)	1 PC
8	BACK BONE (R)	1 PC
9	BACK PANEL (L)	1 PC
10	BACK PANEL (R)	2 PCS
11	DOOR PANEL (L)	2 PCS
12	DOOR PANEL (R)	1 PC
13	CENTER LEG	1 PC
14	CABINET LEG	2 PCS

SELF-PREPARED TOOLS: Tools below are NOT included in package.	
SCREWDRIVER	HAMMER

VOLOS

CODING
- 354039

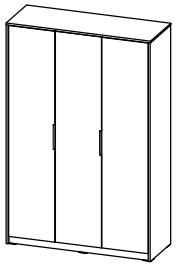

ISO 9001:2015
Reg. No. 600455-1-MT-1-QMS

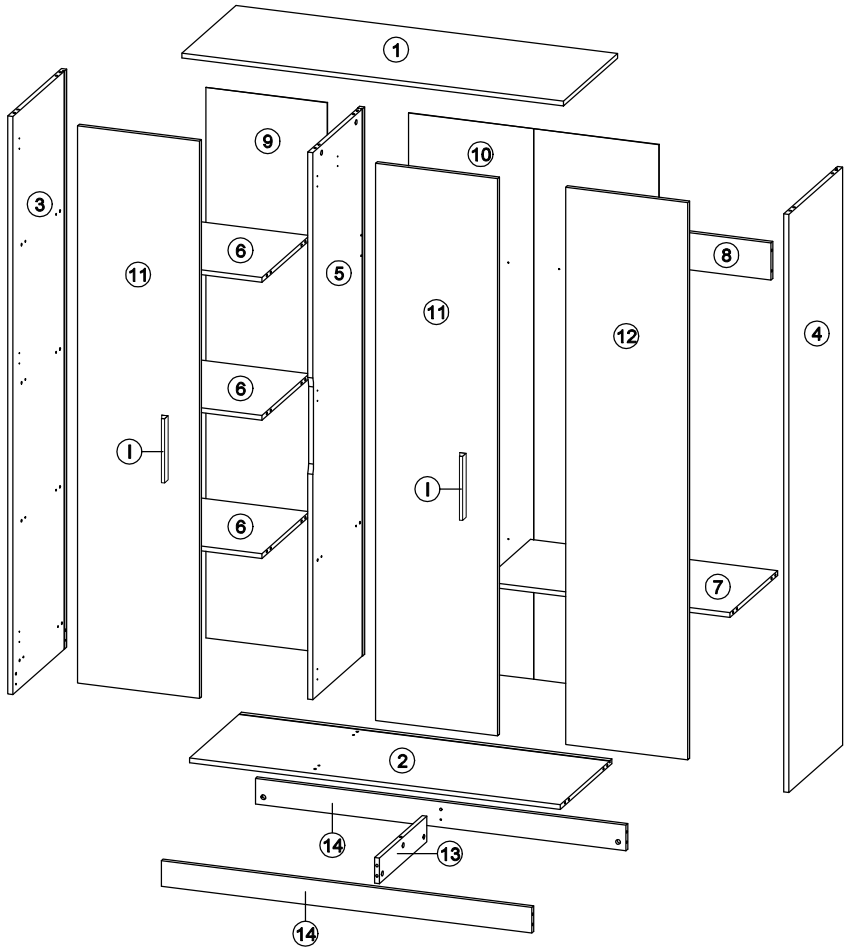

STEP 1

- Insert hardware **A2** onto panel **(2)**, **(3)**, **(4)**, **(5)** and **(14)**.
  (Repeat 31 times.)
- Insert hardware **B** into panel **(2)**, **(3)**, **(4)**, **(5)**, **(6)**, **(7)**, **(13)** and **(14)**.
  (Repeat 34 times.)

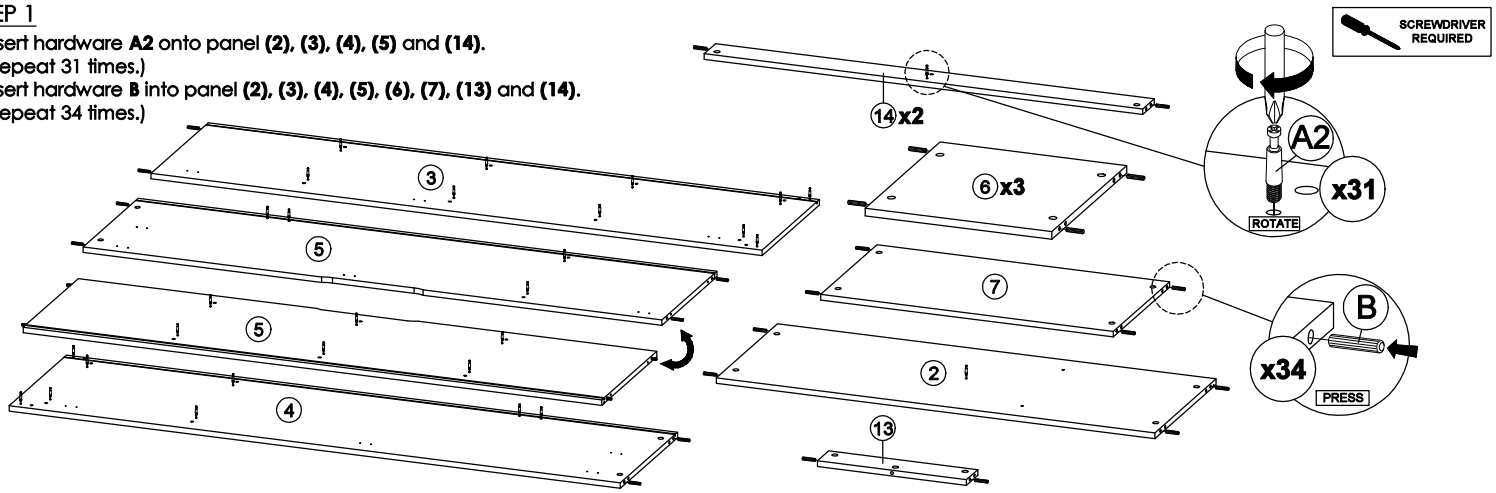

VOLOS

CODING
- 354039

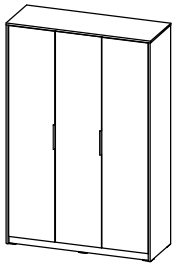

ISO 9001:2015
Reg. No. 600455-1-MT-1-QMS

STEP 2
- Insert hardware **A2** onto panel **(1)**.
  (Repeat 6 times.)
- Hit hardware **H** onto panel **(1)**.
  (Repeat 1 times.)
- Assemble the hardware **H** onto panel **(1)** by using hardware **E**.
  (Repeat 1 times.)

HAMMER REQUIRED
AND
SCREWDRIVER REQUIRED

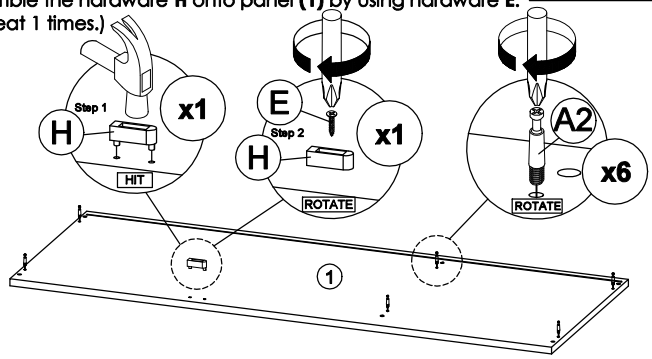

STEP 3
Assemble the hardware **J** onto panel **(4)** and **(5)** by using hardware **E**.
(Repeat 2 times for each hardware.)

SCREWDRIVER REQUIRED

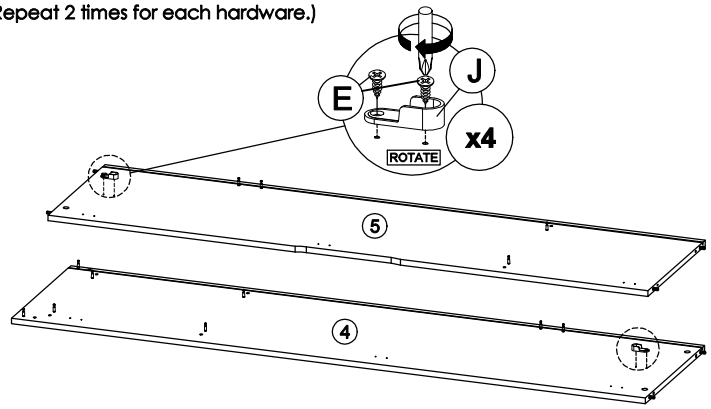

STEP 4
- Insert hardware **A1** into panel **(13)**.
  (Repeat 2 times.)
- Attach panel **(14)** to panel **(13)**.
- Insert all hardware **A2** into **A1**.
- Rotate all **A1** until tight.
- Apply **A3** onto all **A1**.
  (Repeat 2 times.)

SCREWDRIVER REQUIRED
OR
HARDWARE D

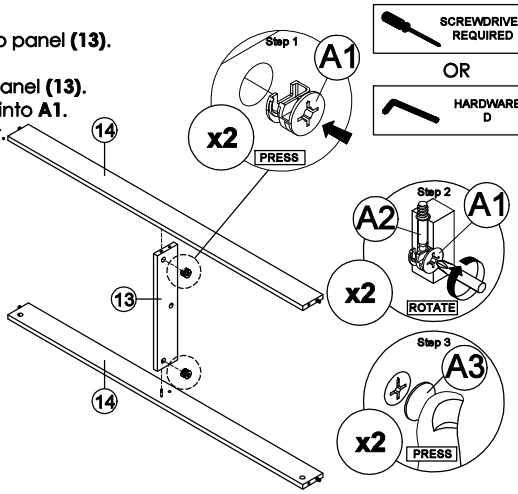

STEP 5
- Insert hardware **A1** into panel **(13)**.
  (Repeat 1 times.)
- Attach panel **(13)** to panel **(2)**.
- Insert all hardware **A2** into **A1**.
- Rotate all **A1** until tight.
- Apply **A3** onto all **A1**.
  (Repeat 1 times.)

SCREWDRIVER REQUIRED
OR
HARDWARE D

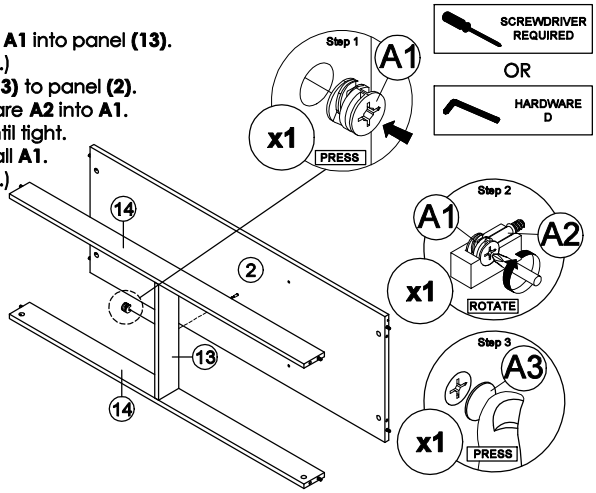

STEP 6
Connect panel **(2)** to panel **(5)** by using hardware **C** and **D**.
(Repeat 2 times.)

HARDWARE D

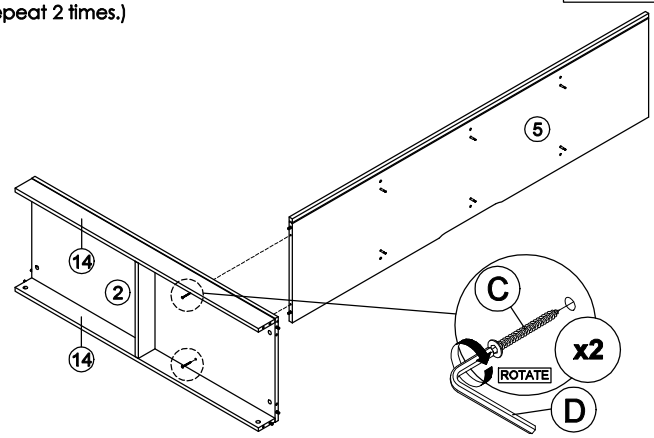

STEP 7
- Insert hardware **A1** into panel **(6)** and **(7)**.
  (Repeat 8 times.)
- Attach panel **(6)** and **(7)** to panel **(5)**.
- Insert all hardware **A2** into **A1**.
- Rotate all **A1** until tight.
- Apply **A3** onto all **A1**.
  (Repeat 8 times.)

SCREWDRIVER REQUIRED
OR
HARDWARE D

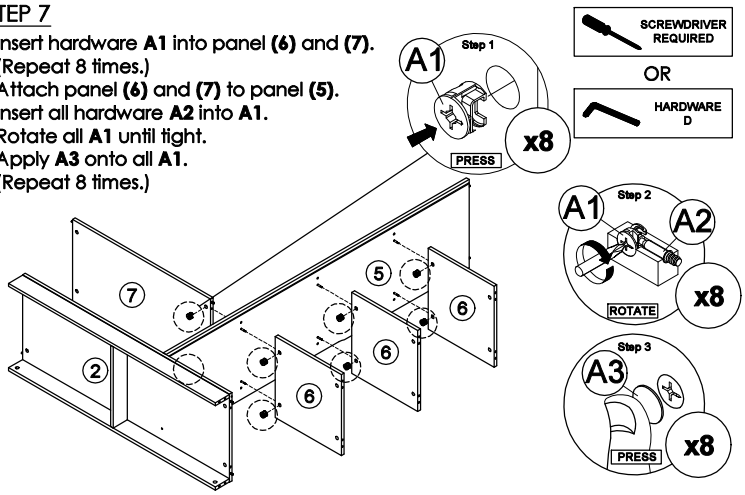

CODING
- 354039

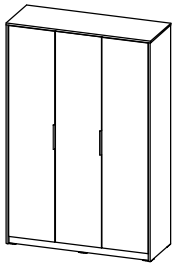

ISO 9001:2015
Reg. No. 600455-1-MT-1-QMS

STEP 8

- Insert hardware **A1** into panel **(2)**, **(6)**, **(7)** and **(8)**. (Repeat 20 times.)
- Attach panel **(3)** and **(4)** to panel **(2)**, **(6)**, **(7)**, **(8)** and **(14)**.
- Insert all hardware **A2** into **A1**.
- Rotate all **A1** until tight.
- Apply **A3** onto all **A1**. (Repeat 20 times.)

SCREWDRIVER REQUIRED
OR
HARDWARE D

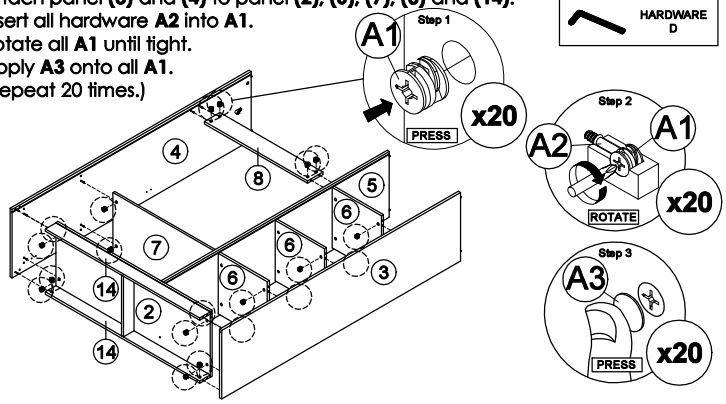

STEP 9

Insert the panel **(9)** and **(10)** along the slot.

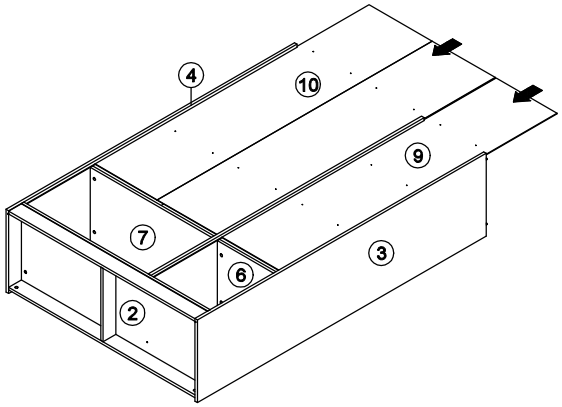

STEP 10

- Insert hardware **A1** into panel **(3)**, **(4)** and **(5)**. (Repeat 6 times.)
- Attach panel **(1)** to panel **(3)**, **(4)** and **(5)**.
- Insert all hardware **A2** into **A1**.
- Rotate all **A1** until tight.
- Apply **A3** onto all **A1**. (Repeat 6 times.)

SCREWDRIVER REQUIRED
OR
HARDWARE D

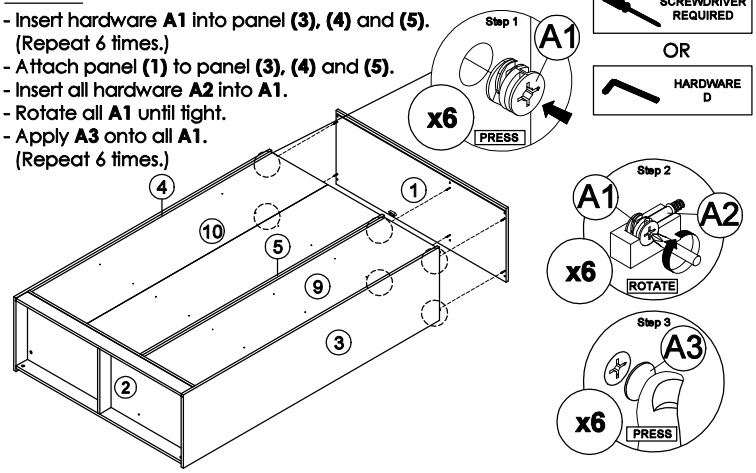

STEP 11

Fix hardware **M** onto panel **(3)**, **(4)**, **(13)** and **(14)** by using hardware **E**. (Repeat 36 times.)

SCREWDRIVER REQUIRED

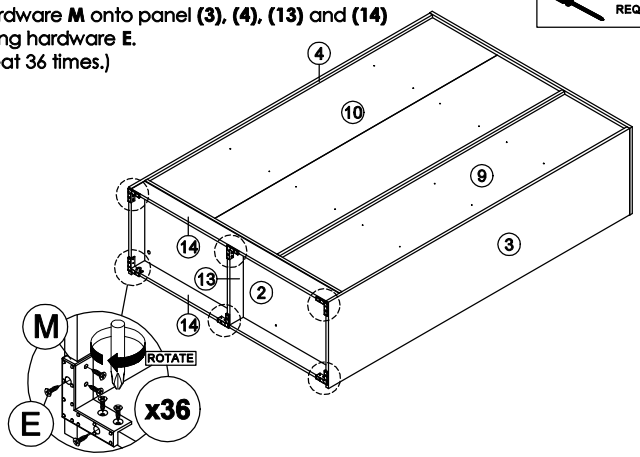

STEP 12

Connect panel **(9)** and **(10)** to panel **(6)**, **(7)** and **(8)** by using hardware **G**. (Repeat 14 times.)

SCREWDRIVER REQUIRED

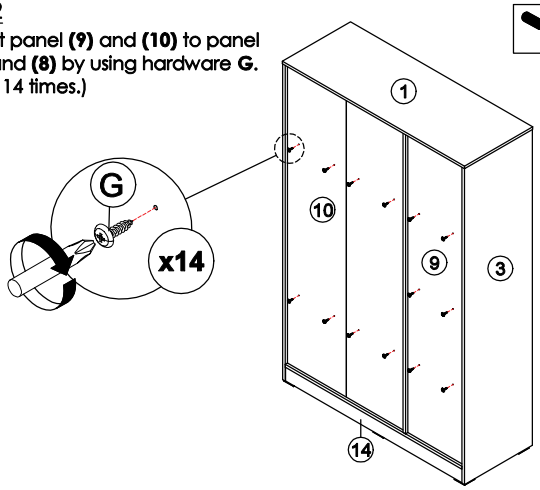

STEP 13

Attach hardware **K** to hardware **J**. (Repeat 1 times.)

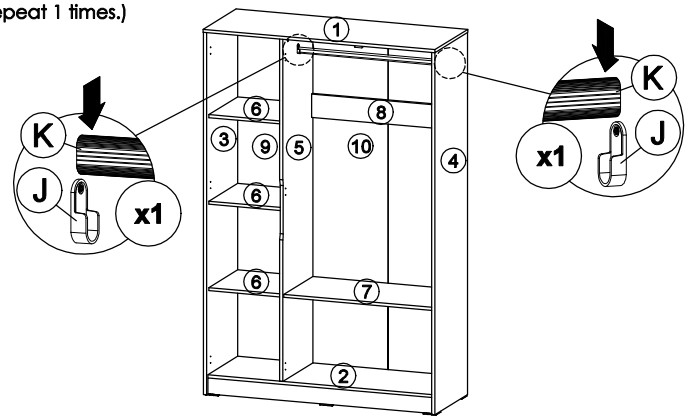

VOLOS

CODING
- 354039

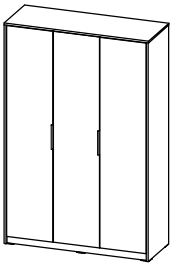

ISO 9001:2015
Reg. No. 600455-1-MT-1-QMS

STEP 14
SCREWDRIVER REQUIRED

- Fix hardware **L** onto panel **(11)** and **(12)** by using hardware **E.**
  (Repeat 18 times for each hardware.)

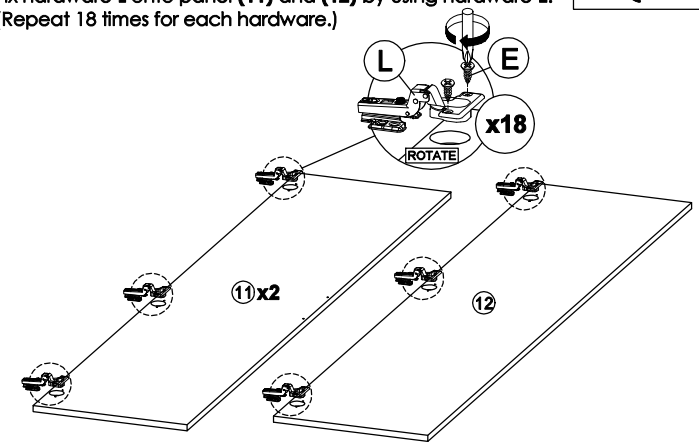

STEP 15
SCREWDRIVER REQUIRED

Fix hardware **I** onto panel **(11)** by using hardware **F.**
(Repeat 2 times for each hardware.)

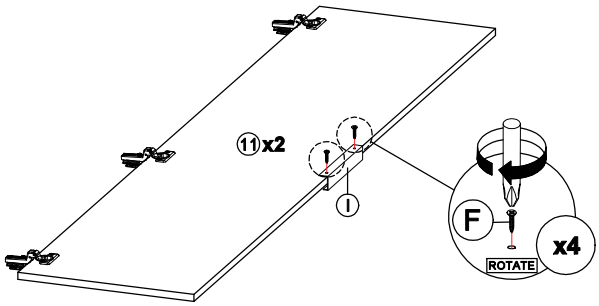

STEP 16
SCREWDRIVER REQUIRED

- Fix hardware **L** onto panel **(3), (4)** and **(5)** by using hardware **E.**
  (Repeat 4 times for each hardware.)
- Tighten or loosen the screw to adjust position of panel **(11)** and **(12).**
  (Do only when needed.)

