DUBLIN

CODING
-353032
-353033

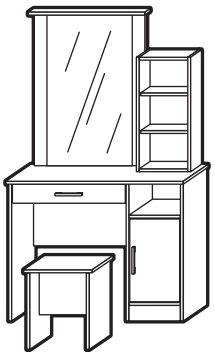

ISO 9001:2015
Reg. No. 000435-1-MY-1-QMS

Read the instructions carefully. Remove all the wrappings , staples and straps from the carton. Refer to the hardware and furniture part list for guidance. Make sure that you have all the parts before you start assembling. Place all the wooden furniture parts on a clean, flat and soft surface, such as a carpet or rubbermat to prevent scratches.

CAUTION
KEEP ALL THE PARTS OUT OF REACH OF CHILDREN.

	HARDWARE LIST		QTY
A		M5 x 40mm JCBCW Screw	22
B		M4 x 32mm Chipboard Screw	4
C		M4 x 28mm Chipboard Screw	19
D		M3.5 x 22mm Chipboard Screw	20
E		M3.5 x 16mm Chipboard Screw	50
F		M3.5 x 12mm Chipboard Screw	3
G		Wood Dowel 6 x 25mm	43
H		Nail	30
I		Minifix Pin	2
J		Minifix Cam 12mm	2
K		Magnet	1
L		Magnet Plate	1
M		Plastic Leg (1374)	10
N		L Bracket	10
O		Door Holder (AC 75 L)	2
P		Handle (AC81 96mm)	2
Q		Shelf Holder	12
R		Metal Drawer Slide 14”	1
S		Metal Drawer Slide 14”	1
T		Allen Key	1

ITEM	PART LIST		
1	Lelf Panel	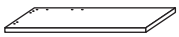	1
2	Right Panel	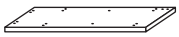	1
3	Center Panel	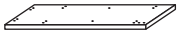	1
4	Desktop Panel	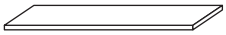	1
5	Back Panel	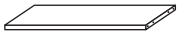	1
6	Shelf Panel 1	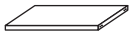	2
7	Shelf Panel 2	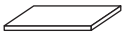	1
8	Leg Brace Panel		1
9	Right Back Panel		1
10	Door Panel	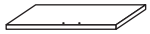	1
11	Drawer Panel		1
12	Drawer Side Panel		2
13	Drawer Back Panel		1
14	Drawer Bottom Panel		1
15	Mirror Panel		1
16	Mirror Top Panel		1
17	Box Lelf Panel		1
18	Box Right Panel	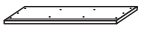	2
19	Box Top Panel		1
20	Box Bottom Panel		1
21	Box Shelf Panel		2
22	Box Back Panel		1
23	Chair Side Panel		2
24	Chair Top Panel		1
25	Chair Barce Panel		1
26	Mirror Back Barce Panel		2

DUBLIN

CODING
-353032
-353033

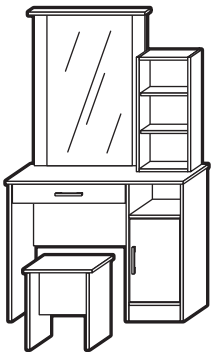

ISO 9001:2015
Reg. No. 000435-1-MY-1-QMS

Step 1

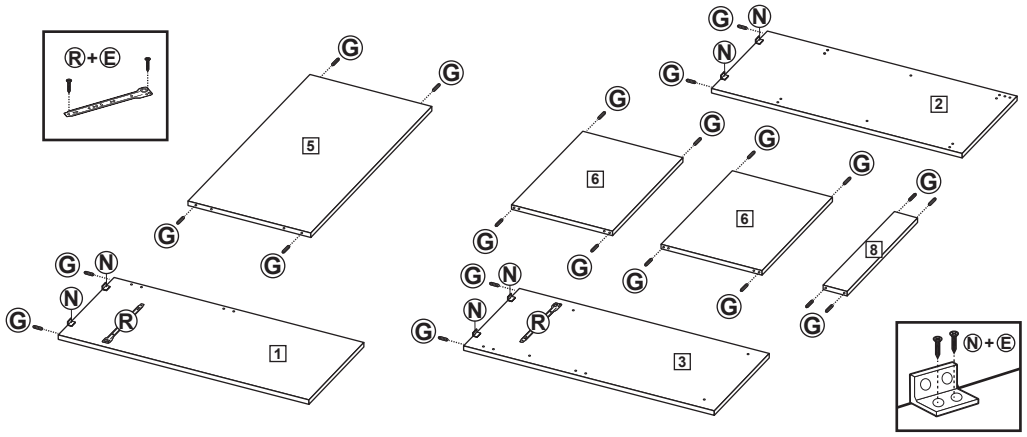

Step 2

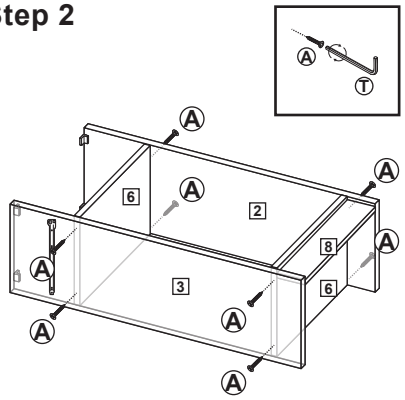

Step 3

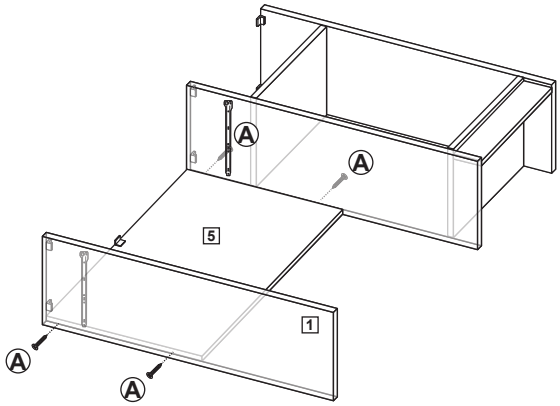

Step 4

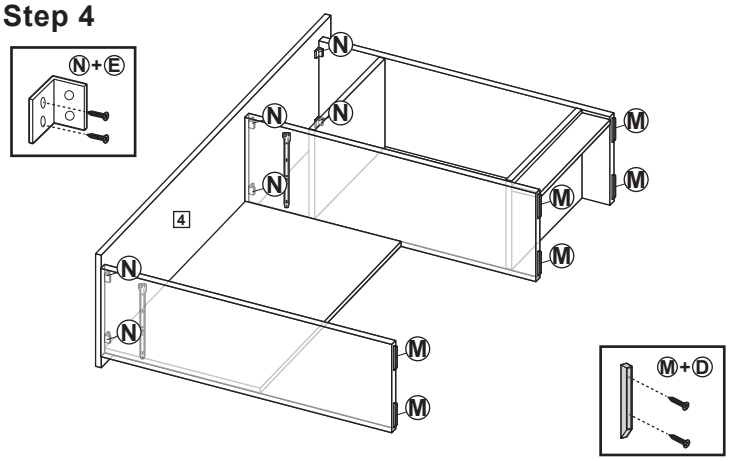

Step 5

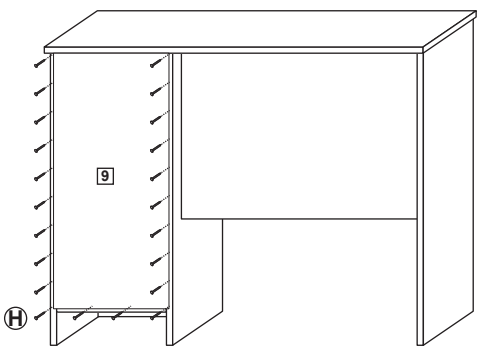

Step 6

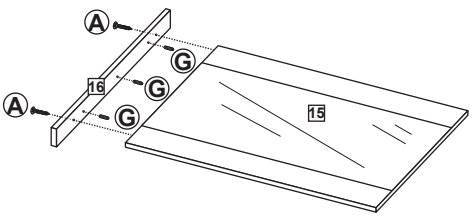

Step 7

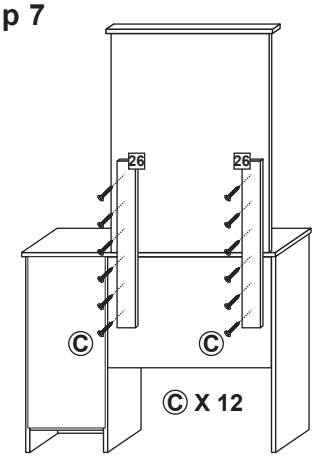

DUBLIN

CODING
-353032
-353033

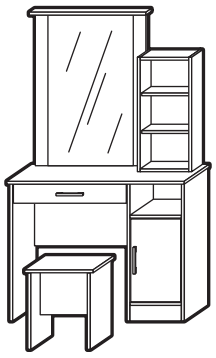

ISO 9001:2015
Reg. No. 000435-1-MY-1-QMS

Step 8

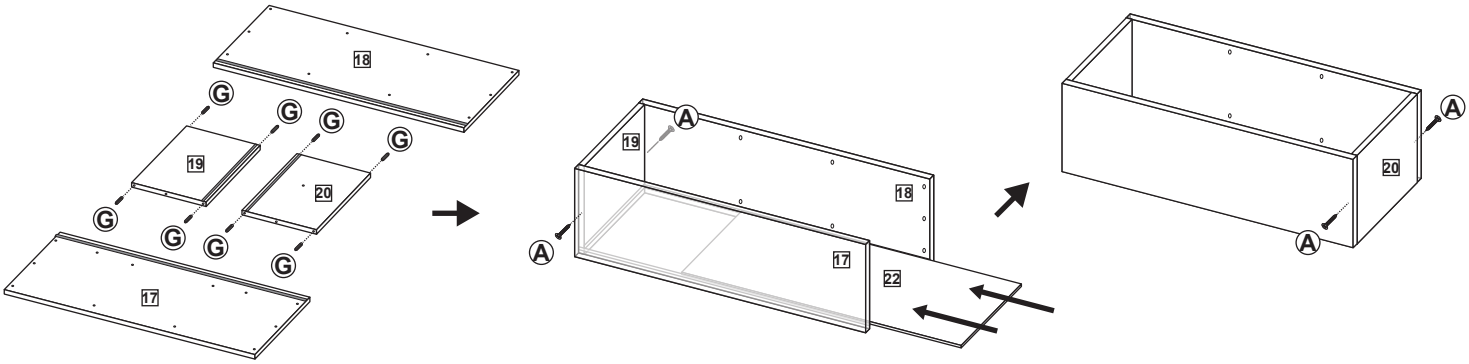

Step 9

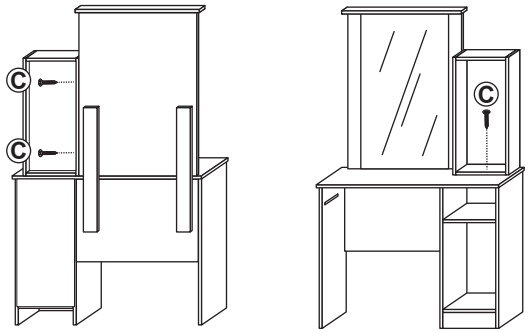

Step 10

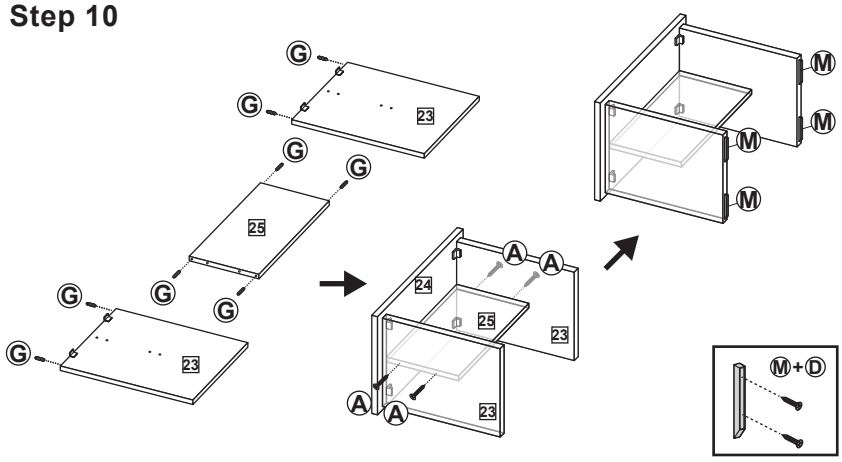

Step 11

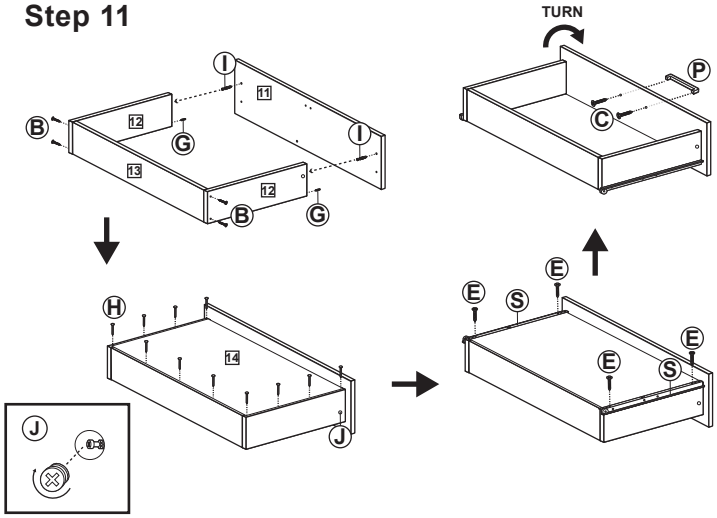

Step 12

