DUBLIN

CODING
-352059
-352060

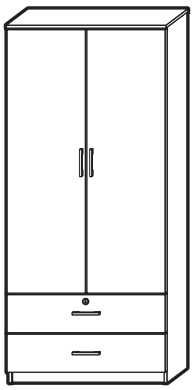

ISO 9001:2015
Reg. No. 000435-1-MY-1-QMS

Read the instructions carefully. Remove all the wrappings , staples and straps from the carton. Refer to the hardware and furniture part list for guidance. Make sure that you have all the parts before you start assembling. Place all the wooden furniture parts on a clean, flat and soft surface, such as a carpet or rubbermat to prevent scratches.

CAUTION
KEEP ALL THE PARTS OUT OF REACH OF CHILDREN.

	HARDWARE LIST		QTY
A		M5 x 40mm JCBCW Screw	14
B		M4 x 32mm Chipboard Screw	8
C		M4 x 28mm Chipboard Screw	13
D		M3.5 x 22mm Chipboard Screw	8
E		M3.5 x 16mm Chipboard Screw	38
F		Wood Dowel 6 x 25mm	28
G		Nail	90
H		Minifix Pin	6
I		Minifix Cam 12mm	6
J		Plastic Leg (1374)	4
K		Handle (AC81 160mm)	4
L		Cam Lock 28mm	1
M		Hinges	4
N		Metal Drawer Slide 14”	2
O		Metal Drawer Slide 14”	2
P		Allen Key	1
Q		Aluminium Pipe	1

ITEM	PART LIST		QTY
1	Lelf Panel	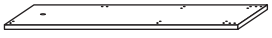	1
2	Right Panel	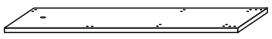	1
3	Top Panel	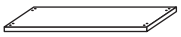	1
4	Centre Panel		1
5	Bottom Panel		2
6	Brace Panel		1
7	Top Brace Panel		1
8	Back Panel		1
9	Door Panel		2
10	Drawer Panel		2
11	Drawer Side Panel		4
12	Drawer Back Panel		2
13	Drawer Bottom Panel		2
14	Drawer Brace Panel		2

DUBLIN

CODING
-352059
-352060

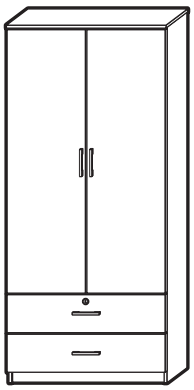

ISO 9001:2015
Reg. No. 000435-1-MY-1-QMS

Step 1

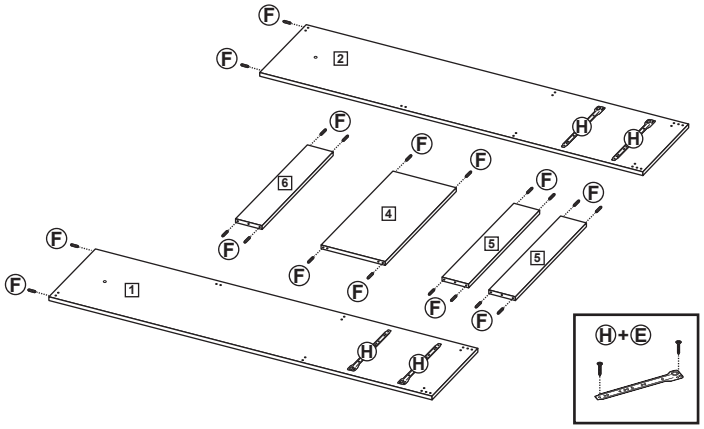

Step 2

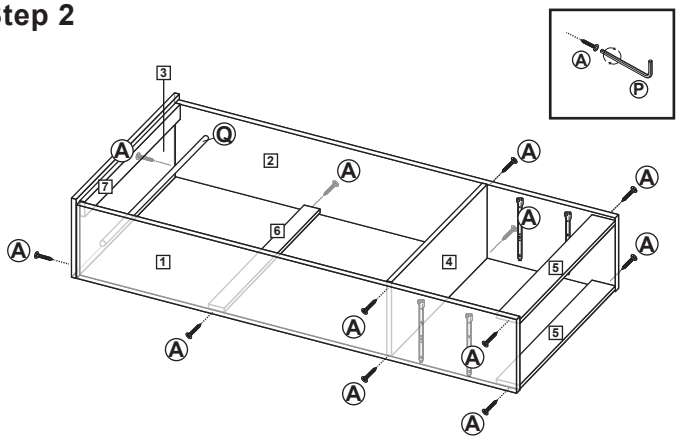

Step 3

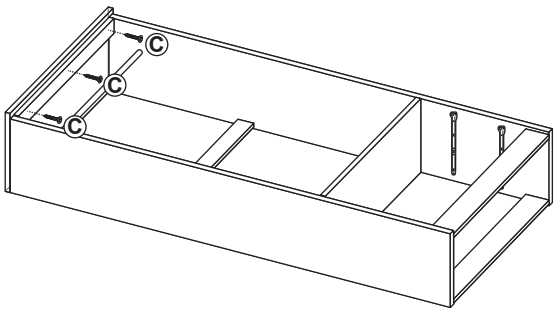

Step 4

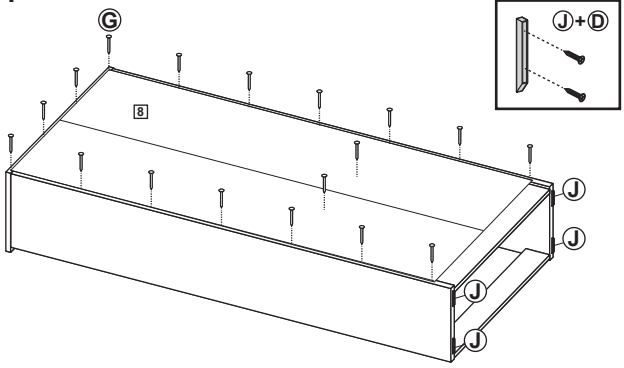

Step 5

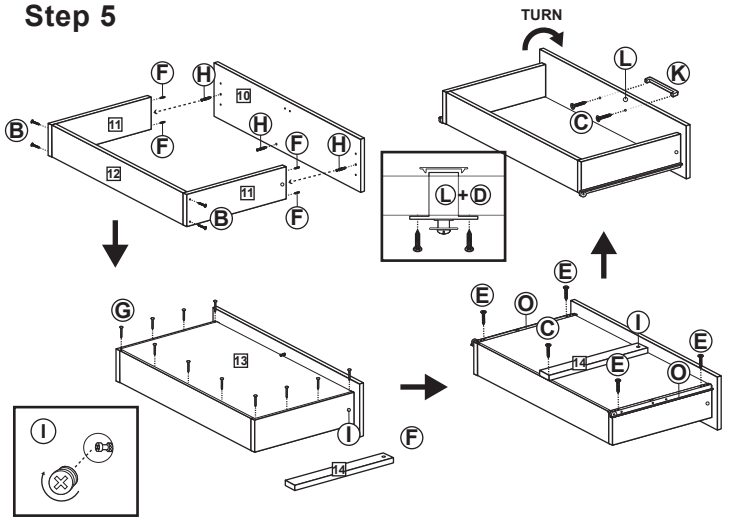

Step 6

