NAOMI

CODING
- 352012
- 352013
- 352014
- 352015



ISO 9001:2015
Reg. No. 000435-1-MY-1-QMS

Read the instructions carefully. Remove all the wrappings , staples and straps from the carton. Refer to the hardware and furniture part list for guidance. Make sure that you have all the parts before you start assembling. Place all the wooden furniture parts on a clean, flat and soft surface, such as a carpet or rubbermat to prevent scratches.

CAUTION
KEEP ALL THE PARTS OUT OF CHILDREN'S REACH.

ITEM	PHOTO	HARDWARE NAME	QTY
(A)		SCREW (M4 X 38)	28 PCS
(B)		WOOD DOWEL (6 X 25)	32 PCS
(C)		SCREW (M3.5 X 16)	74 PCS
(D)		SCREW (M4 X 32)	12 PCS
(E)	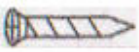	SCREW (M4 X 65)	4 PCS
(F)		DRAWER LOCK (SHORT TYPE)	4 PCS
(G)(H)		(G) HINGE, (H)HINGE BASE PLATE	10 PCS, 10 PCS
(I)		HANDLE	4 PCS
(J)		NAIL	80 PCS
(K)	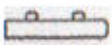	STOPPER	4 PCS
(L)		SELF SUPPORT	8 PCS
(M)(N)		(M)PVC LEG STUD, (N)PVC LEG STUD	4 PCS, 2 PCS
(O)		SMALL PANEL (FOR FIXING OF THE HINGE)	1 PC

ITEM	PHOTO	PART'S NAME	QTY
(1)		HORIZONTAL PANEL	1 PC
(2)		BIG CENTER PANEL	1 PC
(3)		TOP-RIGHT SIDE PANEL	1 PC
(4)		HANGER ROD	2 PCS
(5)		TOP-LEFT SIDE PANEL	1 PC
(6)		TOP PANEL	1 PC
(7)		BOTTOM PANEL	1 PC
(8)		SMALL CENTER PANEL	1 PC
(9)(10)		(9)FRONT SUPPORT BAR, (10)BACK SUPPORT BAR	1 PC, 1 PC
(11)		BOTTOM-RIGHT SIDE PANEL	1 PC
(12)(13)		(12)FRONT CROSS BAR, (13)BACK CROSS BAR	1 PC, 1 PC
(14)		BOTTOM-LEFT SIDE PANEL	1 PC
(15)(16)		(15)TOP BACK PANEL, (16)BOTTOM BACK PANEL	1 PC, 1 PC
(17)		SHELF PANEL	2 PCS
(18)(19)		(18)BIG RIGHT DOOR, (19)BIG LEFT DOOR	1 PC, 1 PC
(20)(21)		(20)SMALL RIGHT DOOR, (21)SMALL LEFT DOOR	1 PC, 1 PC

NAOMI

CODING
- 352012
- 352013
- 352014
- 352015



ISO 9001:2015
Reg. No. 000435-1-MY-1-QMS

1. FIXING WOOD DOWEL

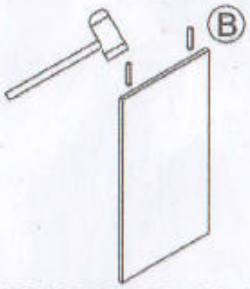

FIXING WOOD DOWEL TO PANEL
2, 3, 5, 7, 8, 9, 10, 12, 13

2. FIXING HINGES

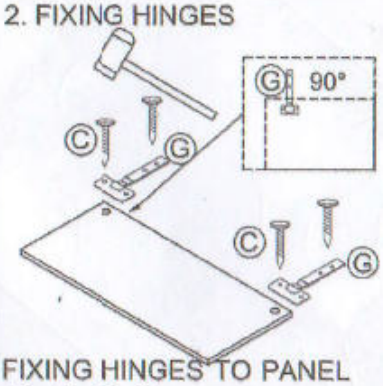

FIXING HINGES TO PANEL
18, 19, 20, 21

3. FIXING LOCK

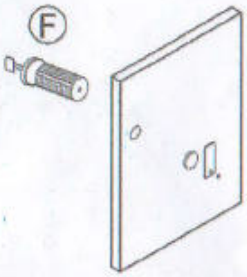

FIXING LOCK TO PANEL 18, 19, 20, 21

4. FIXING HANDLE

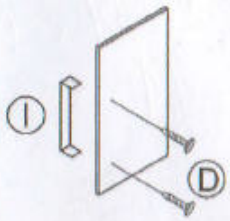

FIXING HANDLE TO PANEL
18, 19, 20, 21

5. FIXING METAL SELF SUPPORT

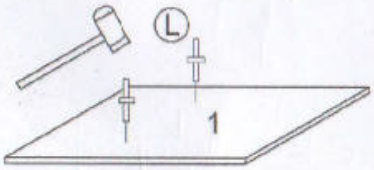

FIXING SELF SUPPORT TO PANEL 2, 5

6. FIXING STOPPER

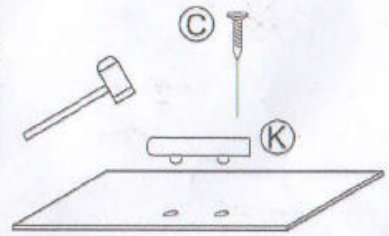

FIXING STOPPER TO PANEL 2, 8

7.

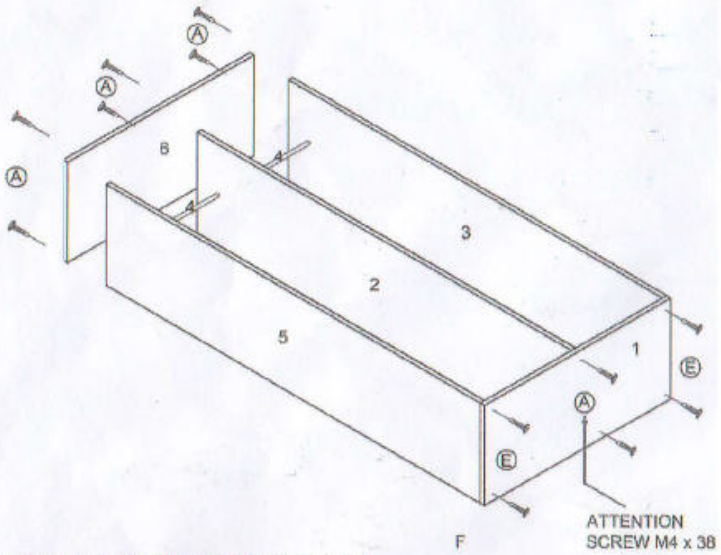

FIXING SCREWS TO PANEL 1, 6
* 4 - HANGER ROD

8.

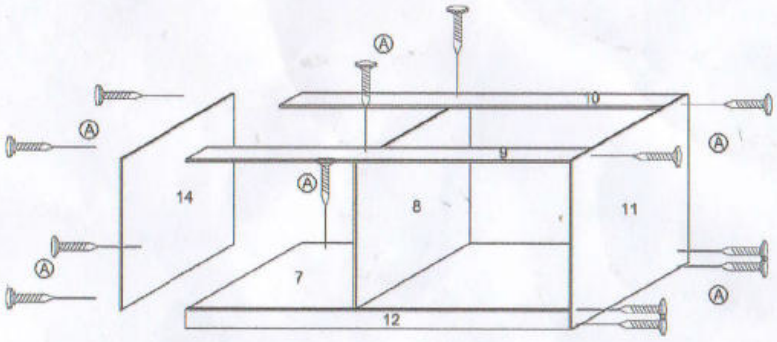

AFTER FIXING ALL SCREWS TO PANEL 11
TURN OVER TO FIXING PANEL 14

NAOMI

CODING
- 352012
- 352013
- 352014
- 352015



ISO 9001:2015
Reg. No. 000435-1-MY-1-QMS

9.

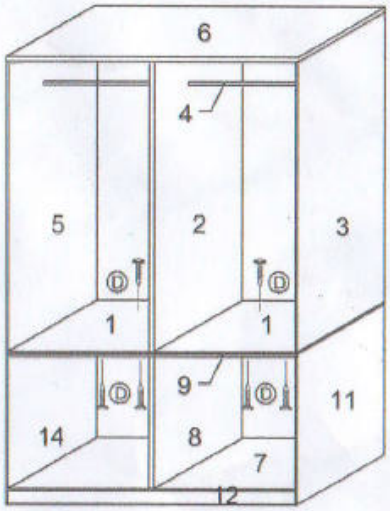

10.

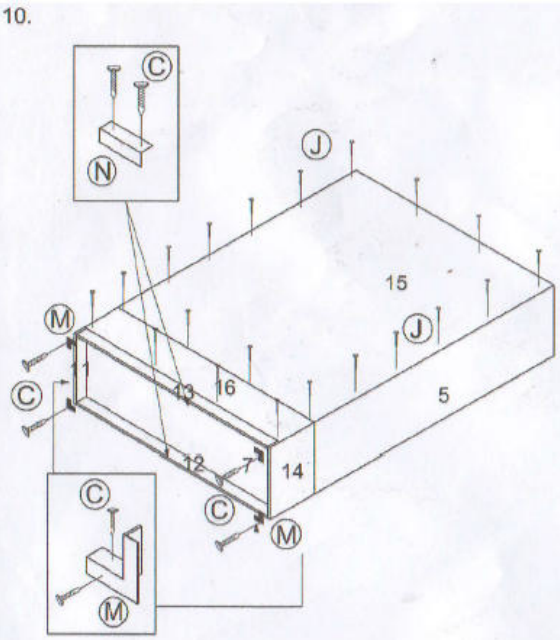

12.



11.

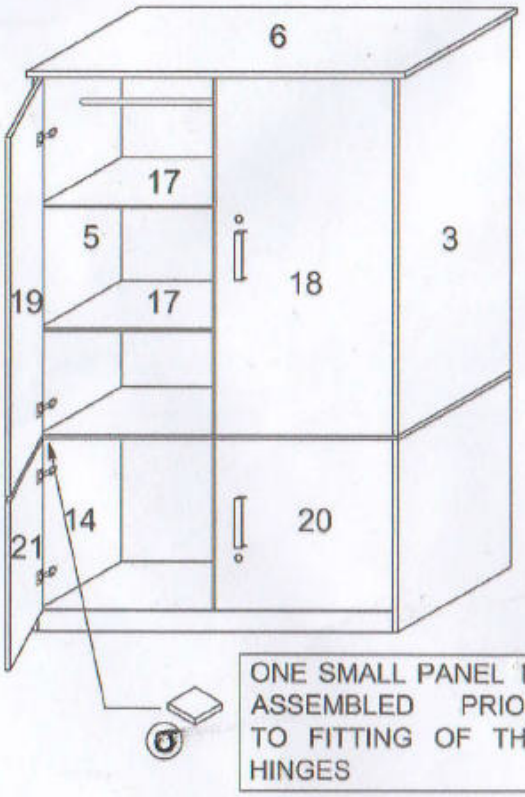

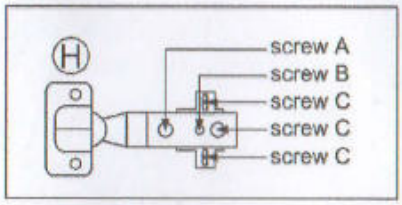

BEFORE FIXES PANEL 18, 19, 20, 21 TIGHTEN ALL THE SCREWS "C" INSERT THE HINGE DIRECTLY TO THE OTHER HINGE PART. TIGHTEN SCREW "B". FINALLY, SLIGHTLY TIGHTEN THE SCREW "A".

ONE SMALL PANEL IS ASSEMBLED PRIOR TO FITTING OF THE HINGES

* 18, 19, 20, 21 - DOOR
* 17 - SHELVES