OPTIMUS

SKU CODE

SPS - 25

3518001 (Beige)

3518002 (Grey)

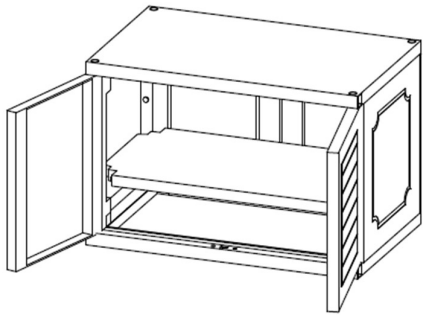

ISO 9001 : 2015
Reg.No.000435-1-MY-1-QMS

Read the instructions carefully. Remove all the wrappings , staples and straps from the carton.
Refer to the hardware and furniture part list for guidance.
Make sure that you have all the parts before you start assembling.
Place all the wooden furniture parts on a clean, and soft surface, such as a carpet or rubbermat to prevent scratches

CAUTION

KEEP ALL THE PARTS OUT OF CHILDREN'S REACH

ITEM	PHOTO	PART NAME	QTY.
1	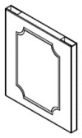	X	2
2	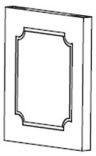	Y	2
3	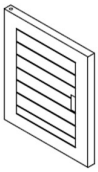	E	2
4	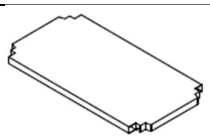	L	1
5	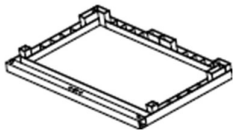	T	2

ITEM	PHOTO	PART NAME	QTY.
6		ST	2
7		c	8
8		Double Cap	2
9		J	4

OPTIMUS

SKU CODE

SPS - 25
3518001 (Beige)
3518002 (Grey)

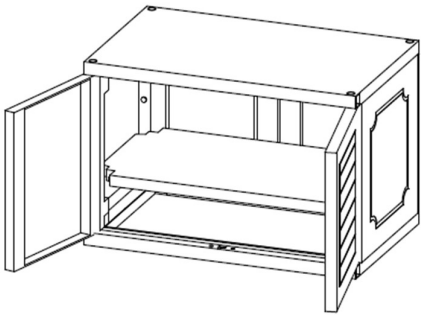

ISO 9001 : 2015
Reg.No.000435-1-MY-1-QMS

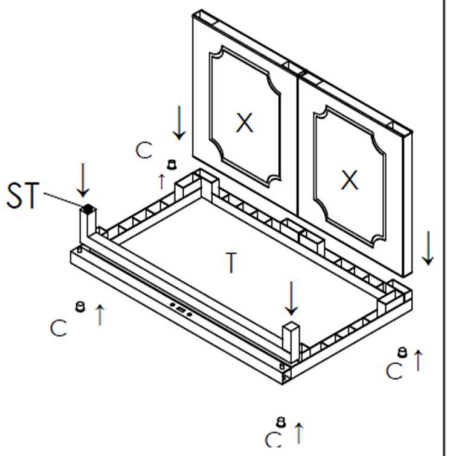

① Assemble ST follow by X and C

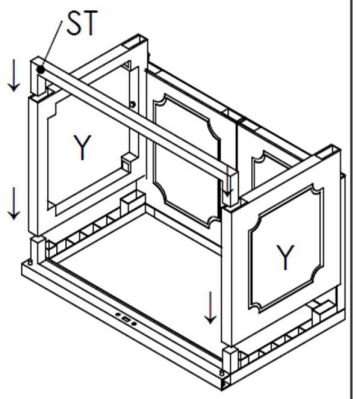

② Assemble Y first
Follow by ST

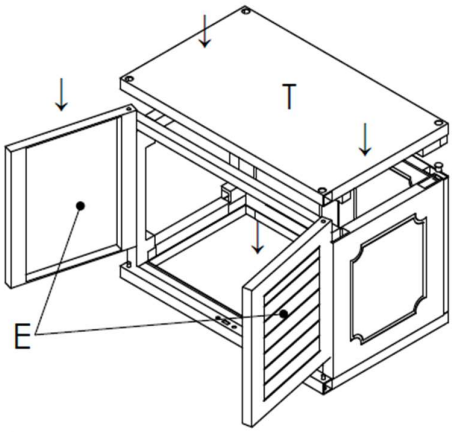

③ Assemble E follow by T

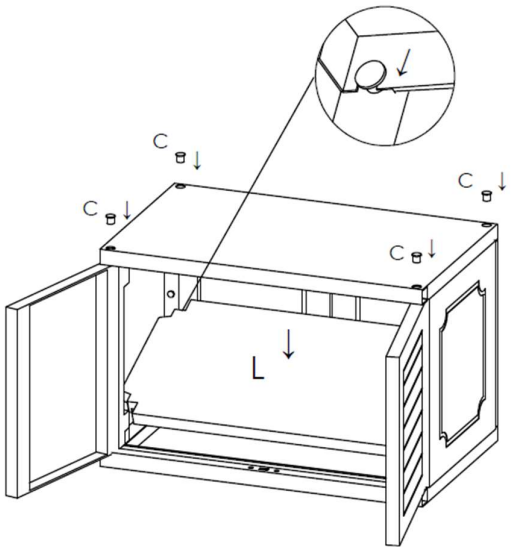

④ Assemble L and C

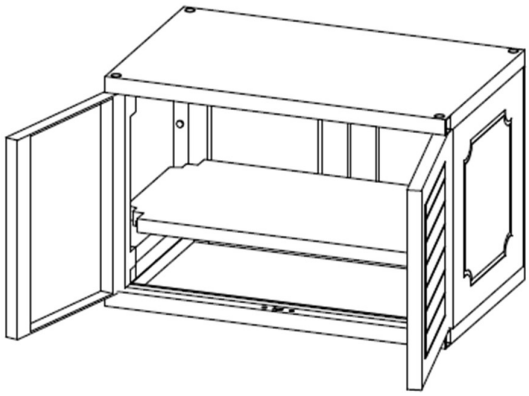

Final Product