KIVI

CODING
- 241759

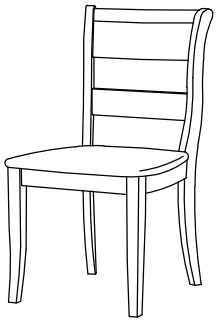

ISO 9001:2015
Reg.No.000435-1-MY-1-QMS

Read the instructions carefully. Remove all the wrappings , staples and straps from the carton. Refer to the hardware and furniture part list for guidance. Make sure that you have all the parts before you start assembling. Place all the wooden furniture parts on a clean, flat and soft surface, such as a carpet or rubbermat to prevent scratches.

CAUTION
KEEP ALL THE PARTS OUT OF CHILDREN'S REACH.

ITEM	PHOTO	HAREWARE NAME	QTY
A		JCBC M6 x 80mm	8 PCS
B		JCBC M6 x 60mm	8 PCS
C		JCBC M6 x 35mm	4 PCS
D		M6 Spring Washer	20 PCS
E		M6 Flat Washer	20 PCS
F		CSK M4 x 32mm	8 PCS
G		Allen Key M4	1 PC

ITEM	PHOTO	PARTS NAME	QTY
1	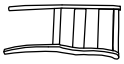	Backrest	2 PCS
2		Box Seat	2 PCS
3		Front Leg	4 PCS
4		Cushion	2 PCS

CODING
- 241759

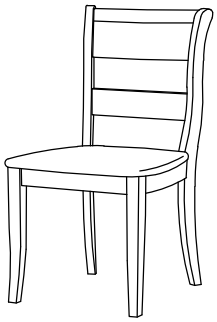

ISO 9001:2015
Reg.No.000435-1-MY-1-QMS

1

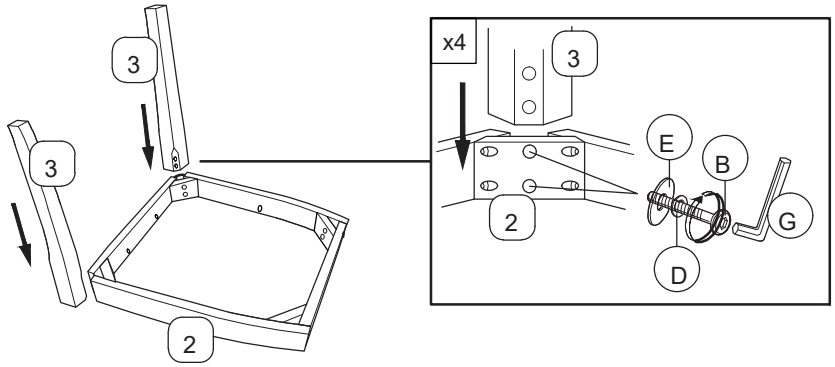

2

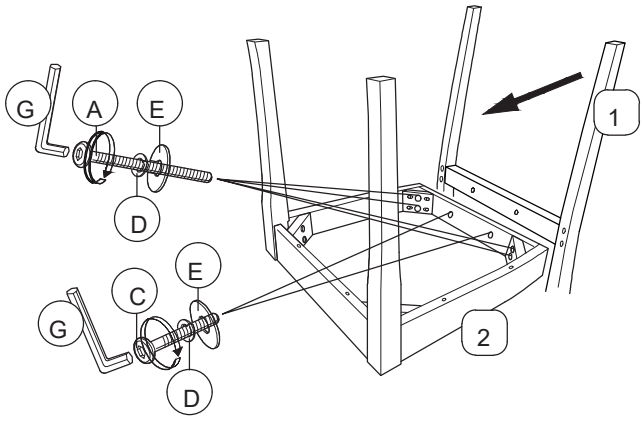

3

