BERNIER

ASSEMBLY GUIDE

CODING
- 241752



ISO 9001 : 2015
Reg. 000435-1-MY-1-QMS

Read the instruction carefully . Remove all the wrapping material staples and straps from the carton. Refer to the hardware and furniture part list for guidance. Be sure you have all part before you start assembling. Place all the wooden furniture part on a clean and flat surface, such as carpet or rubbermat to prevent scratches.

CAUTION
KEEP ALL THE PARTS OUT OF CHILDREN ' S REACH.

ITEM	PHOTO	HARDWARE NAME	QTY
A		JCBC M6 x 90 mm	4
B		JCBC M6 x 60 mm	4
C		JCBC M6 x 35 mm	2
D		ADJUSTER SCREW	2
E		CSK M4 x 32 mm	7
F		FLAT WASHER M6	10
G		SPRING WASHER M6	8
H		ALLEN KEY M4	1

ITEM	PHOTO	PARTS NAME	QTY
1	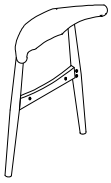	BACK LEG FRAME	1
2	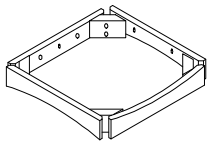	SEATER FRAME	1
3		FRONT LEG	2
4	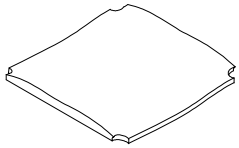	CUSHION SEAT PANEL	1

CODING
- 241752



ISO 9001 : 2015
Reg. 000435-1-MY-1-QMS

1

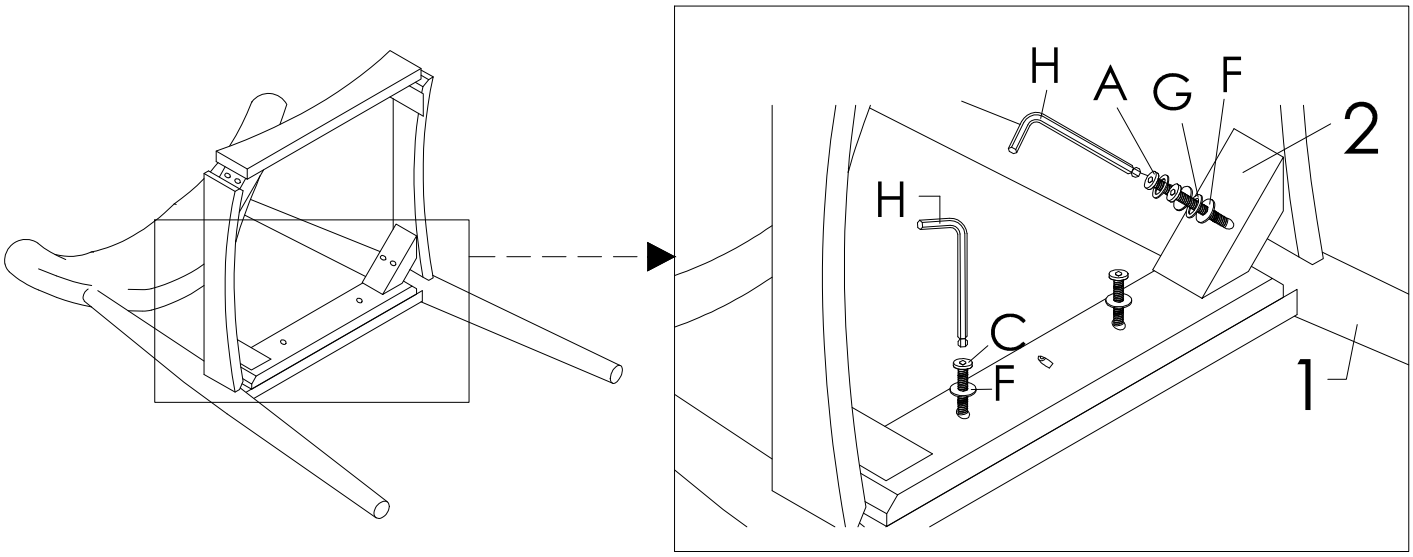

2

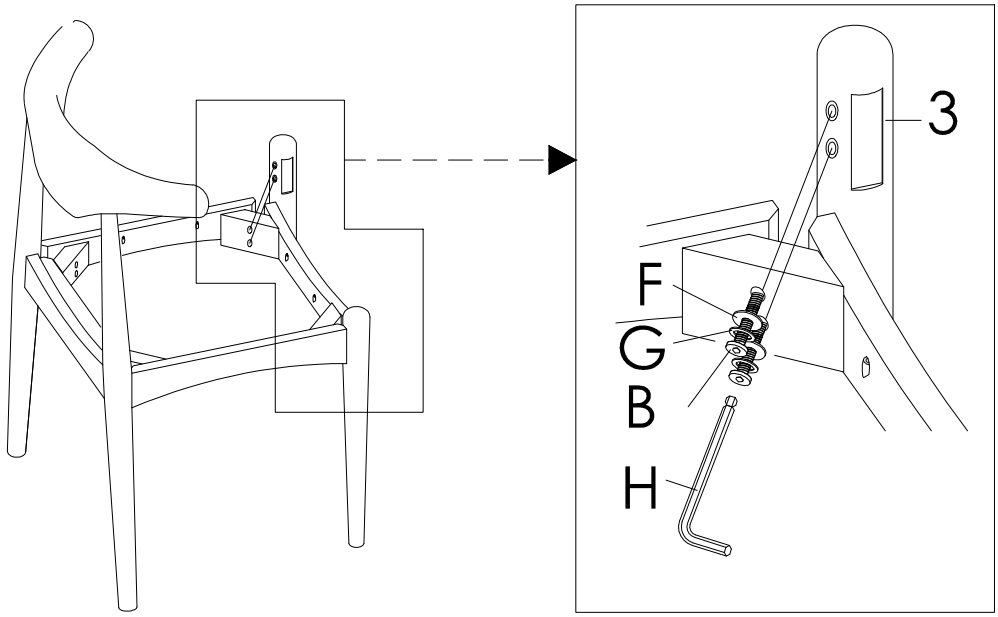

CODING
- 241752



ISO 9001 : 2015
Reg. 000435-1-MY-1-QMS

3

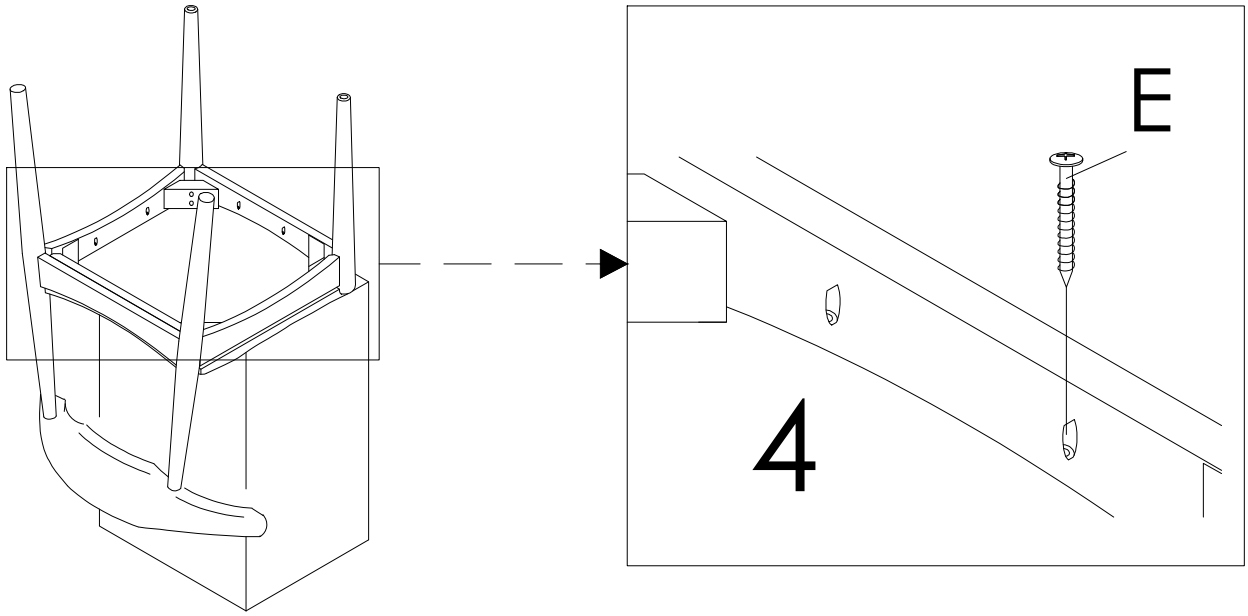

4

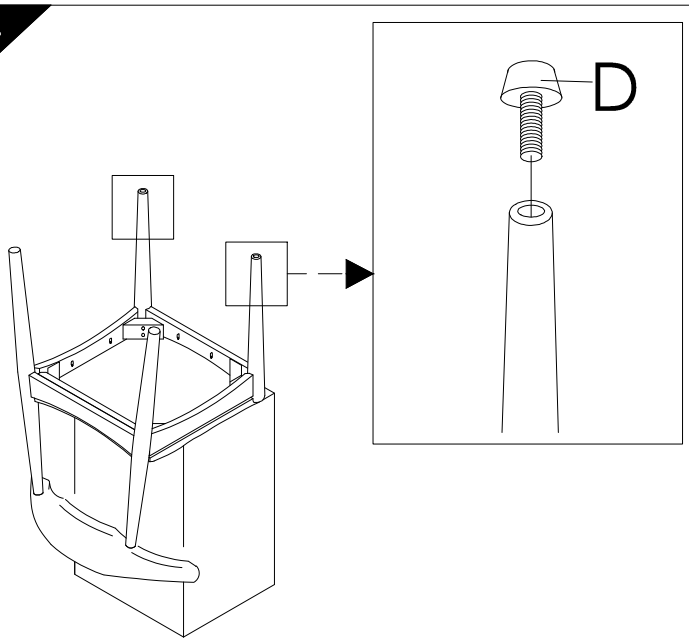

5

COMPLETED ASSEMBLY

