OLLO

ASSEMBLY GUIDE

CODING
- 241751



ISO 9001 : 2015
Reg. 000435-1-MY-1-QMS

Read the instruction carefully . Remove all the wrapping material staples and straps from the carton. Refer to the hardware and furniture part list for guidance. Be sure you have all part before you start assembling. Place all the wooden furniture part on a clean and flat surface, such as carpet or rubbermat to prevent scratches.

CAUTION
KEEP ALL THE PARTS OUT OF CHILDREN ' S REACH.

ITEM	PHOTO	HARDWARE NAME	QTY
A	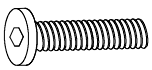	JCBC M6 x 50 mm	6
B		SPRING WASHER M6	4
C		CSK M4 x 32 mm	16
D		JCBCW M7 x 50 mm	2
E		FLAT WASHER M6	4
F		ALLEN KEY M4	1
G		WOOD BUTTON	4

ITEM	PHOTO	PARTS NAME	QTY
1		CONER BLOCK (A)	1
2	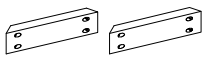	CONER BLOCK (B)	2
3		CONER BLOCK (C)	1
4	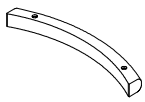	BACK RAIL	1
5	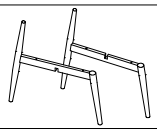	LEG FRAME R & L	2
6	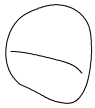	CUSHION BACK	1
7		CUSHION SEAT	1

CODING
- 241751



ISO 9001 : 2015
Reg. 000435-1-MY-1-QMS

1

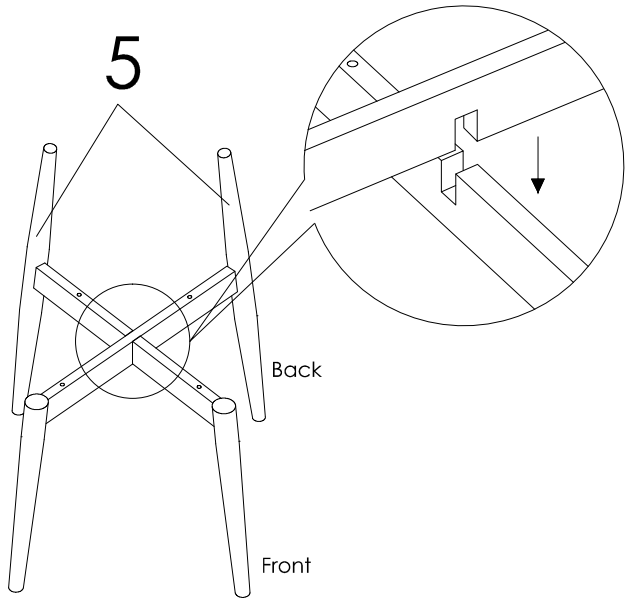

2

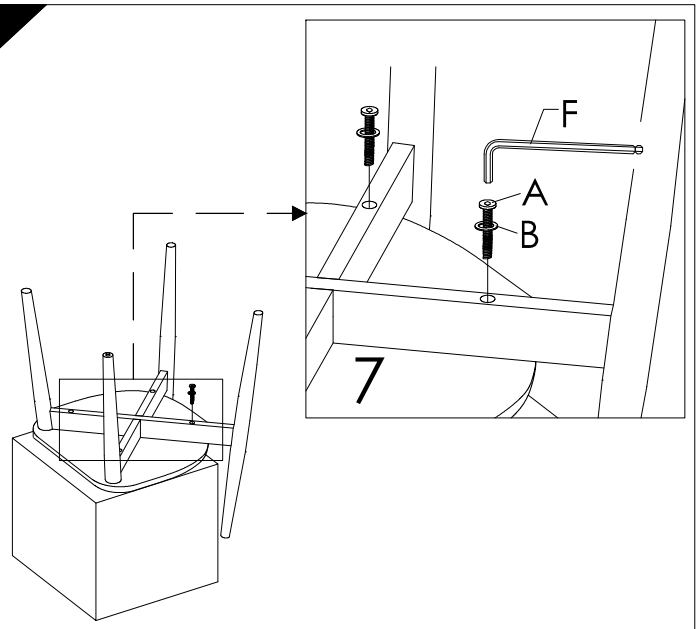

3

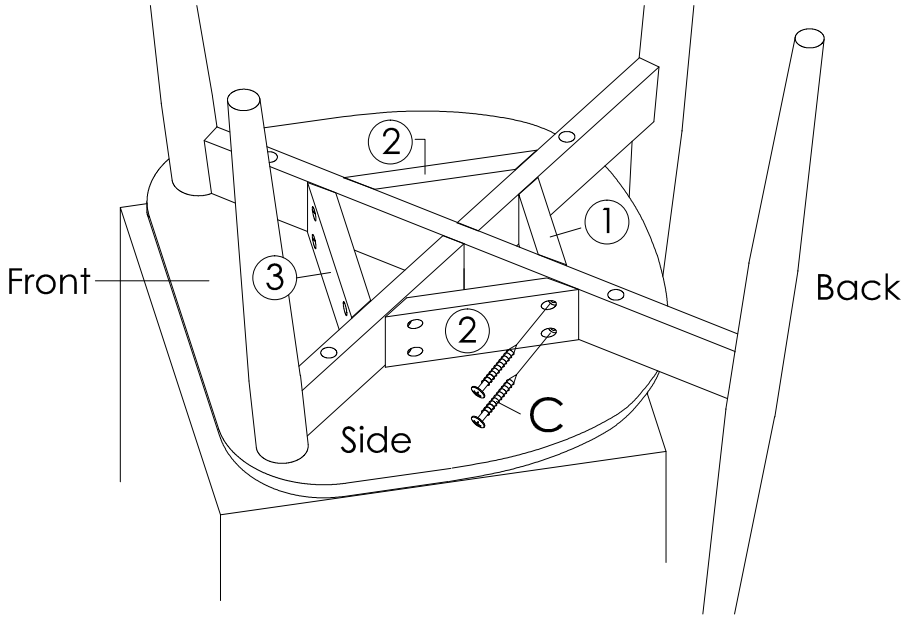

CODING
- 241751



ISO 9001 : 2015
Reg. 000435-1-MY-1-QMS

4

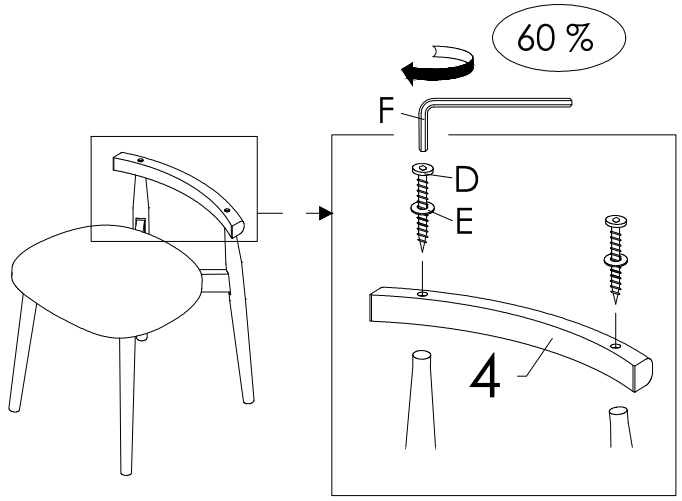

5

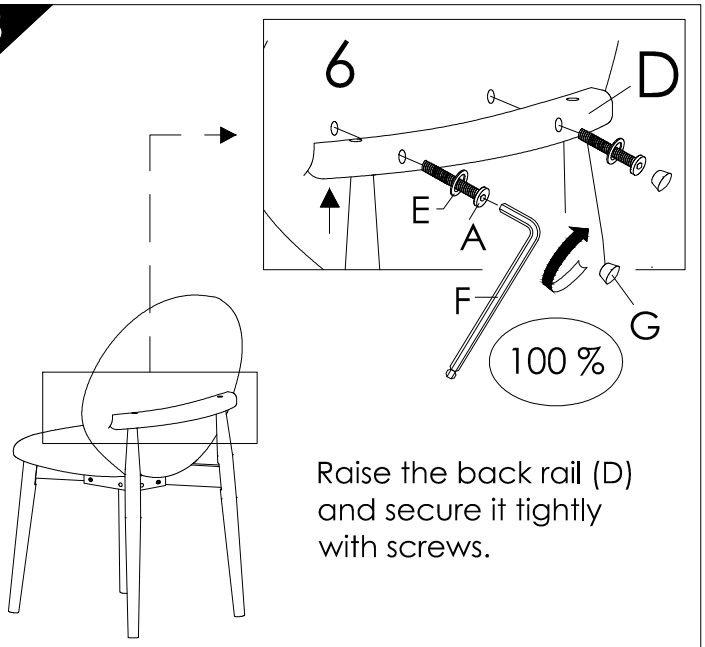

Raise the back rail (D) and secure it tightly with screws.

6

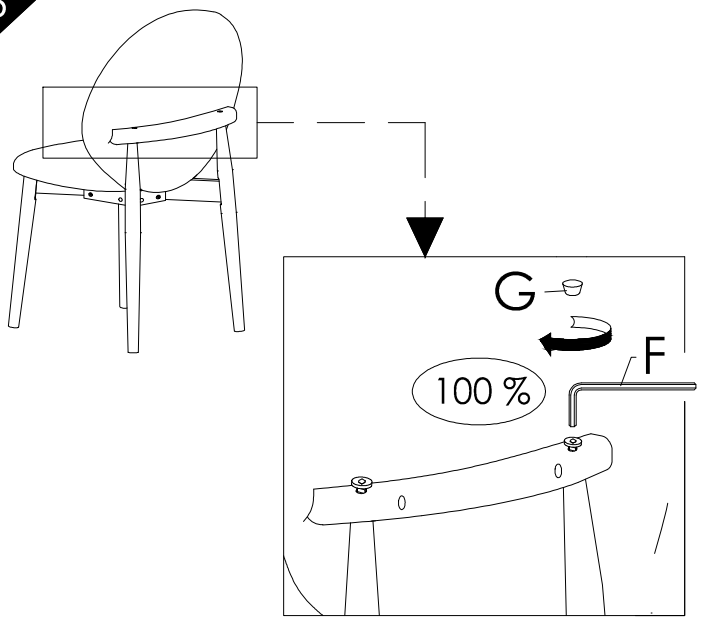

7

