DUBLIN

CODING
-151076
-151077

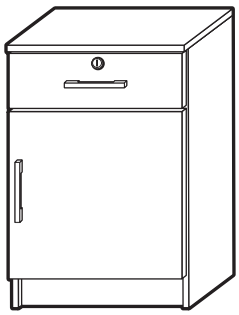

ISO 9001:2015
Reg. No. 000435-1-MY-1-QMS

Read the instructions carefully. Remove all the wrappings , staples and straps from the carton. Refer to the hardware and furniture part list for guidance. Make sure that you have all the parts before you start assembling. Place all the wooden furniture parts on a clean, flat and soft surface, such as a carpet or rubbermat to prevent scratches.

CAUTION
KEEP ALL THE PARTS OUT OF REACH OF CHILDREN.

	HARDWARE LIST	QTY
A	M5 x 40mm JCBCW Screw	6
B	M4 x 32mm Chipboard Screw	4
C	M4 x 28mm Chipboard Screw	4
D	M3.5 x 22mm Chipboard Screw	8
E	M3.5 x 16mm Chipboard Screw	36
F	Wood Dowel 6 x 25mm	16
G	Nail	30
H	Minifix Pin	2
I	Minifix Cam 12mm	2
J	Plastic Leg (1374)	4
K	L Bracket	4
L	Handle (AC81 96mm)	2
M	Shelf Holder	4
N	Hinges	2
O	Metal Drawer Slide 14”	1
P	Metal Drawer Slide 14”	1
Q	Cam Lock 28mm	1
R	Allen Key	1

ITEM	PART LIST	QTY
1	Lelf Panel	1
2	Right Panel	1
3	Top Panel	1
4	Bottom Panel	1
5	Shelf Panel	1
6	Brace Panel	1
7	Leg Brace Panel	1
8	Back Panel	1
9	Door Panel	1
10	Drawer Panel	1
11	Drawer Side Panel	2
12	Drawer Back Panel	1
13	Drawer Bottom Panel	1

DUBLIN

CODING
-151076
-151077

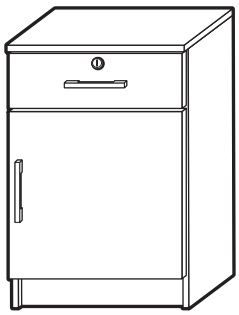

ISO 9001:2015
Reg. No. 000435-1-MY-1-QMS

Step 1

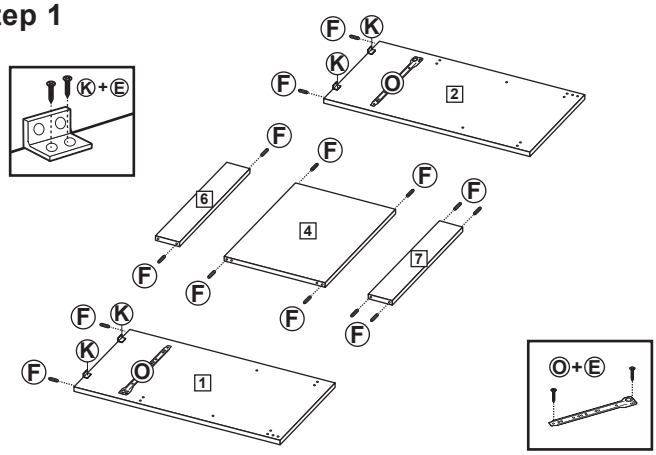

Step 2

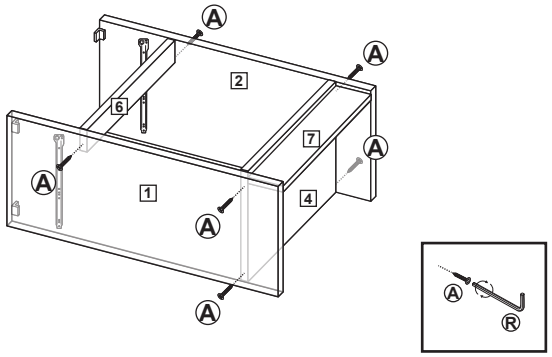

Step 3

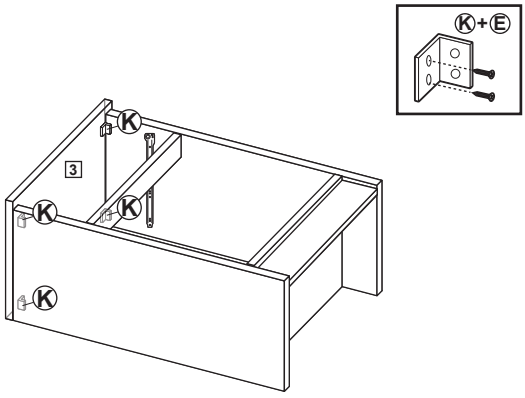

Step 4

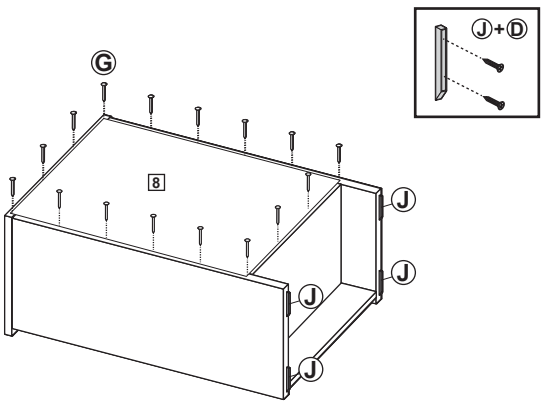

Step 5

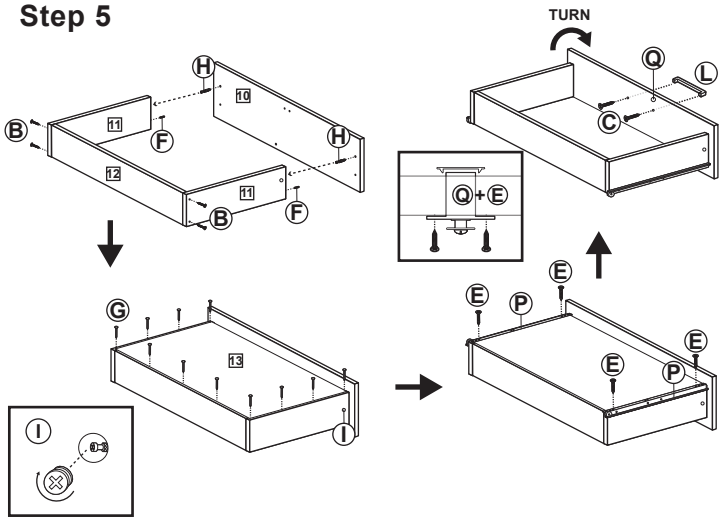

Step 6

