UNOSE

CODING
- 145203

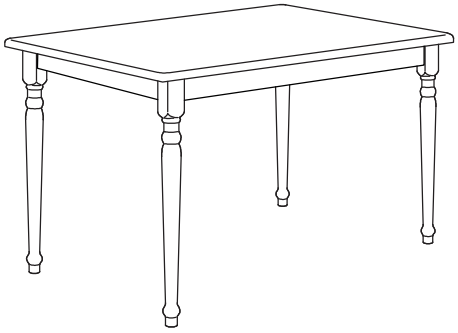

ISO 9001:2015
Reg.No.000435-1-MY-1-QMS

Read the instructions carefully. Remove all the wrappings , staples and straps from the carton. Refer to the hardware and furniture part list for guidance. Make sure that you have all the parts before you start assembling. Place all the wooden furniture parts on a clean, flat and soft surface, such as a carpet or rubbermat to prevent scratches.

CAUTION
KEEP ALL THE PARTS OUT OF CHILDREN'S REACH.

ITEM	PHOTO	HAREWARE NAME	QTY
A		JCBC M6 x 70mm	8 PCS
B		M6 Spring Washer	8 PCS
C		Flat Washer M8 x 22mm	8 PCS
D		Allen Key M4	1 PC

ITEM	PHOTO	PARTS NAME	QTY
1		Table Top	1 PC
2	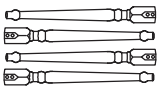	Table Leg	4 PCS

UNOSE

CODING
- 145203

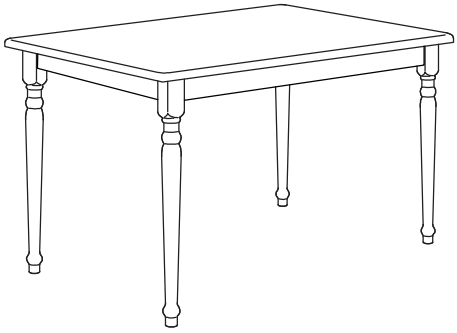

ISO 9001:2015
Reg.No.000435-1-MY-1-QMS

1

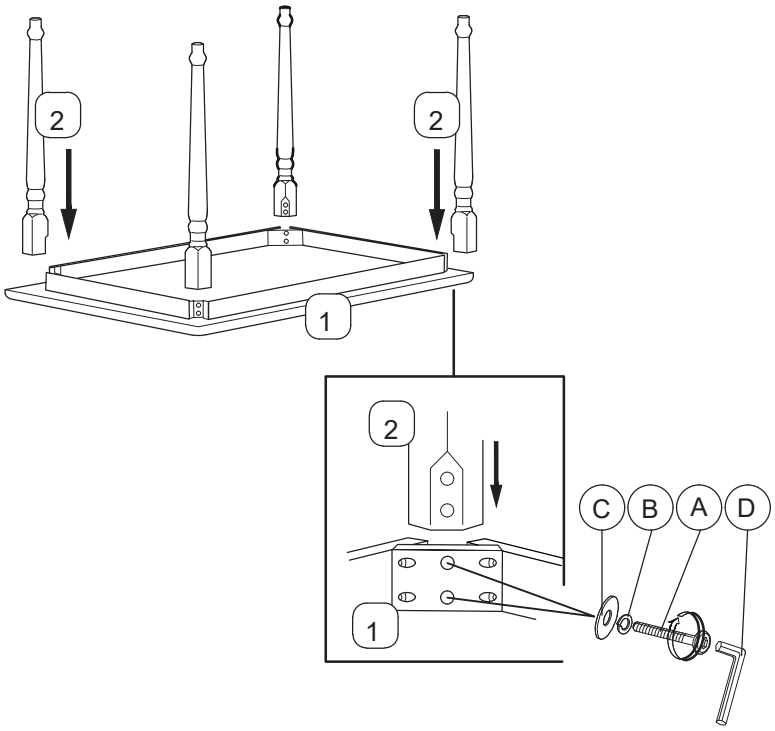

2

