# CORIS



CODING
- 133156
- 133157



ISO 9001 : 2015
Reg. 000435-1-MY-1-QMS

Read the instruction carefully . Remove all the wrapping material staples and straps from the carton. Refer to the hardware and furniture part list for guidance. Be sure you have all part before you start assembling. Place all the wooden furniture part on a clean and flat surface, such as carpet or rubbermat to prevent scratches.

CAUTION
KEEP ALL THE PARTS OUT OF CHILDREN ' S REACH.

| ITEM | PHOTO | PARTS NAME | QTY |
|---|---|---|---|
| 1 |  | TABLE TOP | 1 |
| 2 | 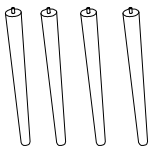 | LEG | 4 |

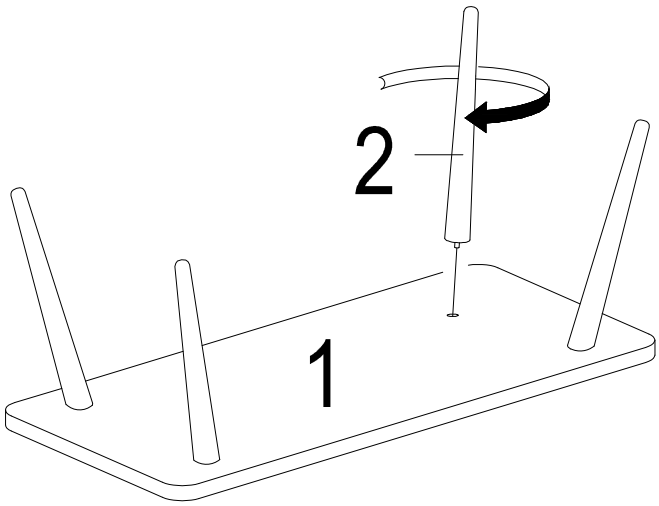


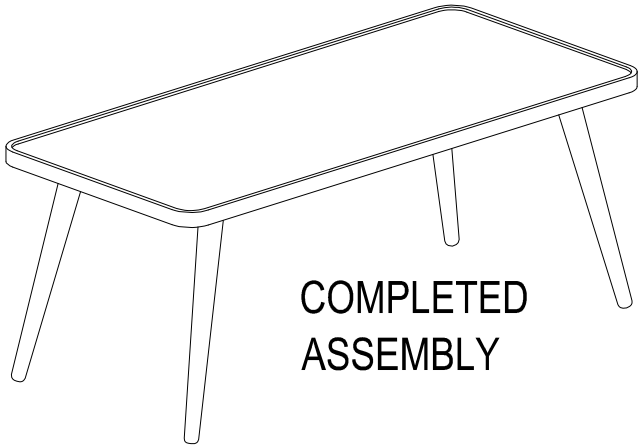

COMPLETED ASSEMBLY