PLEASE FOLLOW THOSE NUMBERS AS STATED BELOW FOR EASY ASSEMBLE.

EXAMPLE : STEP ASM. HARDWARE PART

1 A 12

523019, 523041, 523042

ECO

HARDWARE

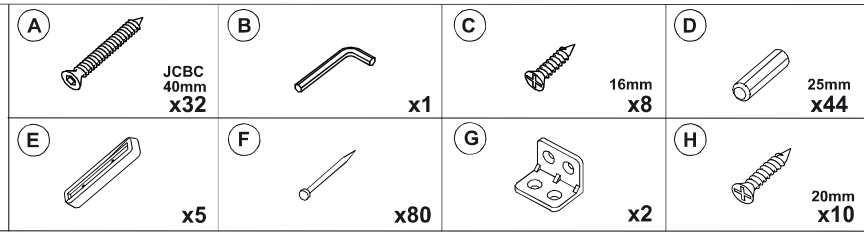

PART

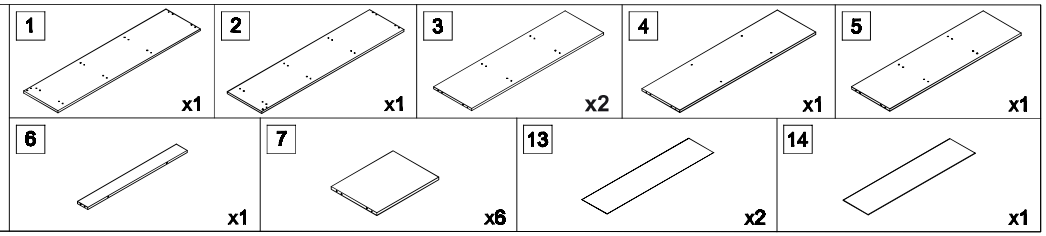

1

INSERT THE 4 PCS DOWEL TO THE 3 , 4 , 5 , 6 , 7 PANEL

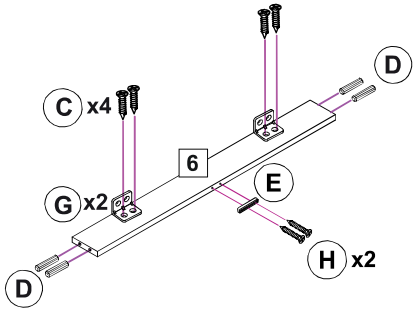

2

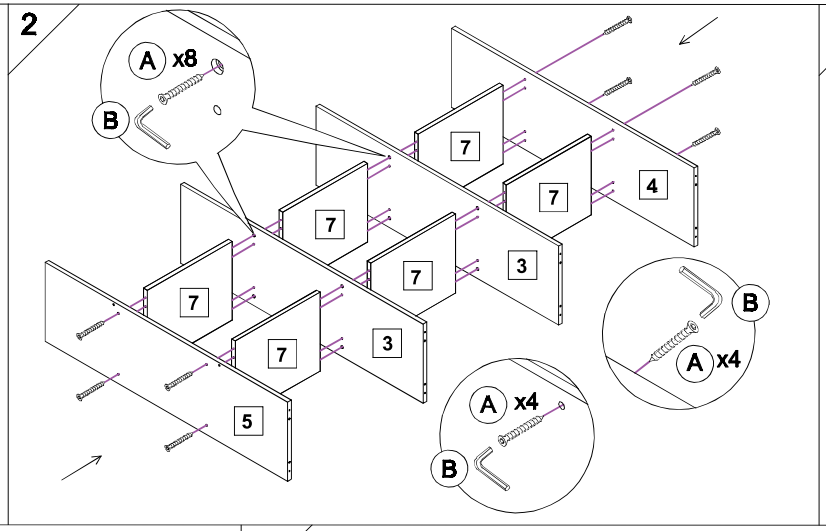

3

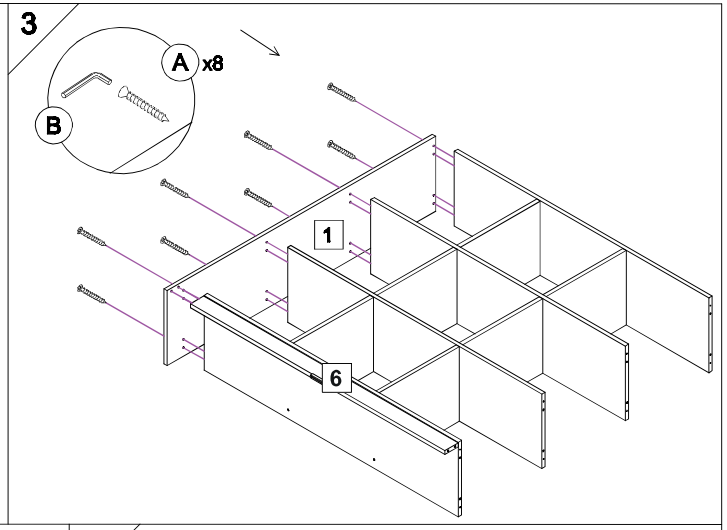

4

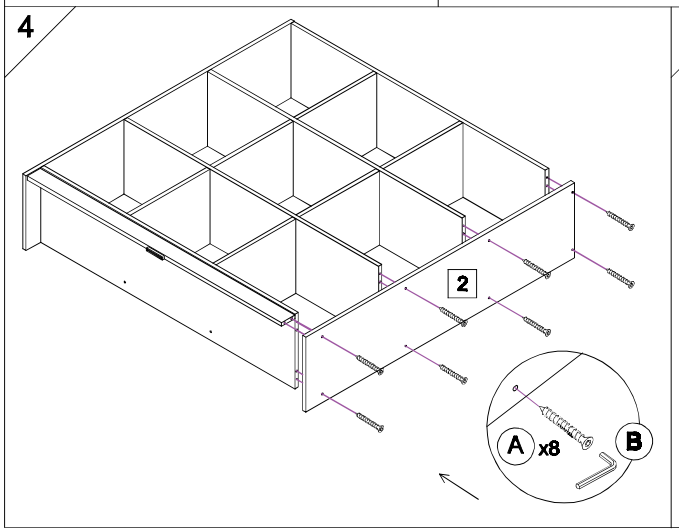

5

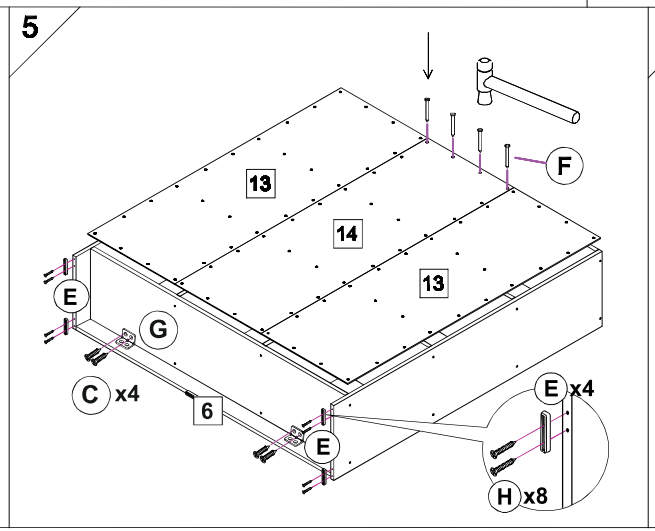
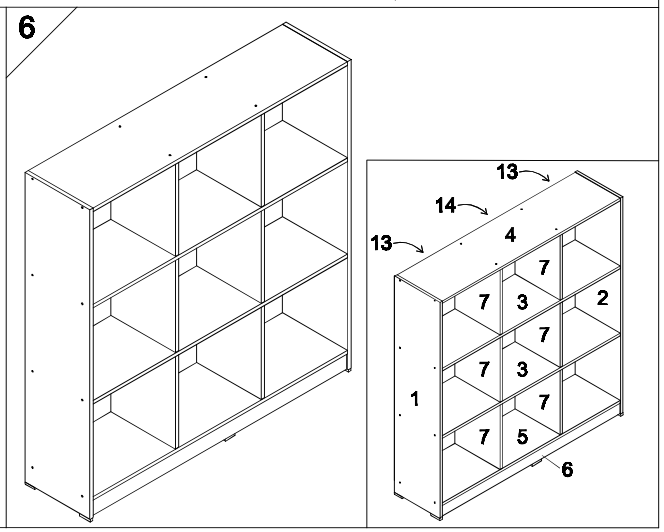
6